Eaton® 9E UPS

20–30 kVA (208/220V)
Installation and Operation Manual

Powering Business Worldwide

Eaton® 9E UPS

20–30 kVA (208/220V)
Installation and Operation Manual

Powering Business Worldwide

IMPORTANT SAFETY INSTRUCTIONS SAVE THESE INSTRUCTIONS

This manual contains important instructions that you should follow during installation and maintenance of the UPS and batteries. Please read all instructions before operating the equipment and save this manual for future reference.

CONSIGNES DE SÉCURITÉ IMPORTANTES CONSERVER CES INSTRUCTIONS

Ce manuel comporte des instructions importantes que vous êtes invité à suivre lors de toute procédure d'installation et de maintenance des batteries et de l'onduleur. Veuillez consulter entièrement ces instructions avant de faire fonctionner l'équipement et conserver ce manuel afin de pouvoir vous y reporter ultérieurement.

Eaton, Powerware, and Mini-Slot are registered trademarks and ConnectUPS is a trademark of Eaton Corporation or its subsidiaries and affiliates. Modbus is a registered trademark of Schneider Electric. National Electrical Code and NEC are registered trademarks of National Fire Protection Association, Inc. All other trademarks are property of their respective companies.

©Copyright 2011–2012 Eaton Corporation, Raleigh, NC, USA. All rights reserved. No part of this document may be reproduced in any way without the express written approval of Eaton Corporation.

Table of Contents

1 INTRODUCTION 1-1

1.1 UPS Standard Features 1-2

1.1.1 Installation Features 1-2

1.1.2 Control Panel 1-2

1.1.3 Customer Interface 1-2

1.1.4 High-Efficiency Normal Mode 1-2

1.1.5 Advanced Battery Management 1-2

1.2 Options and Accessories 1-2

1.2.1 External Battery Cabinet 1-2

1.2.2 Integrated Accessory Cabinet-Distribution 1-2

1.2.3 Integrated Transformer Cabinet 1-3

1.2.4 Integrated Accessory Cabinet-Bypass 1-3

1.2.5 Integrated Accessory Cabinet-Tie 1-3

1.2.6 Integrated Accessory Cabinet-Tie and Bypass 1-3

1.2.7 Parallel System 1-3

1.2.8 Reduced Battery String Model 1-3

1.2.9 Monitoring and Communication 1-4

1.2.10 Dual Feed 1-4

1.2.11 Maintenance Bypass 1-4

1.3 Battery System 1-4

1.4 Basic System Configurations 1-4

1.5 Using This Manual 1-4

1.6 Conventions Used in This Manual 1-5

1.7 Symbols, Controls, and Indicators 1-5

1.8 For More Information 1-6

1.9 Getting Help 1-6

2 SAFETY WARNINGS 2-1

SECTION 1 — INSTALLATION

3 UPS INSTALLATION PLAN AND UNPACKING 3-1

3.1 Creating an Installation Plan 3-1

3.2 Preparing the Site 3-1

3.2.1 Environmental and Installation Considerations 3-1

3.2.2 UPS System Power Wiring Preparation 3-6

3.2.3 UPS System Interface Wiring Preparation 3-10

3.3 Battery Type 3-11

3.4 Inspecting and Unpacking the UPS Cabinets 3-11

4 UPS SYSTEM INSTALLATION 4-1

4.1 Preliminary Installation Information 4-1

4.2 Unloading the UPS Cabinet from the Pallet 4-1

4.3 Installing Power Terminal Cover Base 4-6

4.4 External Battery Cabinet Installation 4-7

4.5 Integrated Transformer Cabinet Installation 4-7

4.6 Integrated Accessory Cabinet-Bypass Installation 4-8

4.7 Integrated Accessory Cabinet-Tie 4-8
4.8 Integrated Accessory Cabinet-Tie and Bypass 4-8
4.9 Integrated Accessory Cabinet-Distribution 4-8
4.10 External Power Wiring Installation 4-8
4.11 Installing Interface Wiring and Connections 4-12
4.11.1 Installing Building Alarm Wiring and Connections 4-12
4.11.2 Installing Parallel Pull Chain and CAN Control Wiring and Connections 4-17
4.11.3 Installing Mini-Slot Interface Wiring and Connections 4-18
4.12 Installing a REPO Switch 4-20
4.13 Connecting Internal Battery Strings 4-23
4.14 Initial Startup 4-26
4.15 Completing the Installation Checklist 4-26

SECTION 2 — OPERATION

5 UNDERSTANDING UPS OPERATION 5-1
5.1 UPS System Overview 5-1
5.2 Single UPS 5-2
5.2.1 Modes 5-2
5.2.2 High-Efficiency Normal Mode 5-2
5.2.3 Standard Normal Mode 5-2
5.2.4 Bypass Mode 5-4
5.2.5 Battery Mode 5-5
5.3 Single UPS Unit System Oneline Configurations 5-6

6 UPS OPERATING INSTRUCTIONS 6-1
6.1 UPS Controls and Indicators 6-1
6.1.1 Control Panel 6-2
6.1.2 Circuit Breakers 6-2
6.2 Using the Control Panel 6-3
6.2.1 Status Indicators 6-3
6.2.2 System Events 6-4
6.2.3 Using the LCD and Pushbuttons 6-5
6.2.4 Using the Menu 6-6
6.2.5 Mimic Screen 6-6
6.2.6 Display Menu Operation 6-7
6.2.7 System Controls 6-9
6.3 Single UPS Operation 6-11
6.3.1 Starting the UPS in High-Efficiency Normal Mode (Default Mode) 6-11
6.3.2 Starting the UPS in Bypass Mode 6-12
6.3.3 Transfer from Normal to Bypass Mode 6-13
6.3.4 Transfer from Bypass to Normal Mode 6-13
6.3.5 Transfer from HE Normal Mode to Standard Normal Mode 6-13
6.3.6 Transfer from Standard Normal Mode to HE Normal mode 6-14
6.3.7 Transfer from Normal Mode to Maintenance Bypass 6-14
6.3.8 Transfer from Maintenance Bypass to Normal Mode 6-14
6.3.9 UPS and Critical Load Shutdown 6-15
6.3.10 Charger Control 6-16
6.3.11 Battery Test 6-16

6.3.12 Using the UPS LOAD OFF Command . . . 6-16
6.3.13 Using the Remote Emergency Power-off Switch . . . 6-17
6.4 Multiple UPS Parallel Operation . . . 6-19
6.4.1 Starting the Parallel UPS in High-Efficiency Normal Mode (Default Mode) . . . 6-19
6.4.2 Starting the Parallel UPS in Bypass Mode . . . 6-20
6.4.3 Transfer from Normal to Bypass Mode . . . 6-21
6.4.4 Transfer from Bypass to Normal Mode . . . 6-21
6.4.5 Transfer from HE Normal Mode to Standard Normal Mode . . . 6-21
6.4.6 Transfer from Standard Normal Mode to HE Normal mode . . . 6-22
6.4.7 Transfer from Normal Mode to Maintenance Bypass . . . 6-22
6.4.8 Transfer from Maintenance Bypass to Normal Mode . . . 6-22
6.4.9 Single UPS Shutdown . . . 6-22
6.4.10 Single UPS Restart . . . 6-23
6.4.11 UPS and Critical Load Shutdown . . . 6-23
6.4.12 Charger Control . . . 6-24
6.4.13 Battery Test . . . 6-24
6.4.14 Using the UPS LOAD OFF Command . . . 6-25
6.4.15 Using the Remote Emergency Power-off Switch . . . 6-26

7 COMMUNICATION . . . 7-1
7.1 Mini-Slot Cards . . . 7-1
7.2 Building Alarm Monitoring . . . 7-1

8 UPS MAINTENANCE . . . 8-1
8.1 Important Safety Instructions . . . 8-1
8.2 Performing Preventive Maintenance . . . 8-2
8.2.1 DAILY Maintenance . . . 8-2
8.2.2 MONTHLY Maintenance . . . 8-2
8.2.3 PERIODIC Maintenance . . . 8-3
8.2.4 ANNUAL Maintenance . . . 8-3
8.2.5 BATTERY Maintenance . . . 8-3
8.3 Installing Batteries . . . 8-4
8.4 Recycling the Used Battery or UPS . . . 8-4
8.5 Maintenance Training . . . 8-4

9 PRODUCT SPECIFICATIONS . . . 9-1
9.1 Model Numbers . . . 9-1
9.2 Specifications . . . 9-1
9.2.1 UPS Input . . . 9-1
9.2.2 UPS Output . . . 9-2
9.2.3 UPS Environmental . . . 9-2
9.2.4 Battery Runtimes (in Minutes) at Full load . . . 9-2

WARRANTY . . . W-1

This page intentionally left blank.

List of Figures

Figure 1-1. Eaton 9E UPS (20–30 kVA) 1-1
Figure 3-1. UPS Cabinet Dimensions (Front and Right Side Views) 3-3
Figure 3-2. UPS Cabinet Dimensions (Top and Bottom Views) 3-4
Figure 3-3. UPS Cabinet Center of Gravity 3-5
Figure 3-4. Remote EPO Switch Dimensions 3-6
Figure 3-5. UPS Cabinet as Shipped on Pallet (wood container removed) 3-13
Figure 4-1. Removing the Front Shipping Bracket 4-2
Figure 4-2. Attaching the Ramp to the Pallet 4-3
Figure 4-3. Removing the Rear Shipping Bracket 4-4
Figure 4-4. Rolling the Cabinet Down the Ramp 4-5
Figure 4-5. UPS Power Terminal Cover Parts 4-6
Figure 4-6. UPS Power Terminal Cover Base Installation and Conduit Landing Wire Entry Locations 4-7
Figure 4-7. Power Terminal Locations 4-9
Figure 4-8. Power Terminal Detail 4-10
Figure 4-9. Power Terminal Cover Top Installation 4-11
Figure 4-10. Interface Terminal Locations 4-12
Figure 4-11. Interface Terminal Detail (Terminal Cover Removed) 4-13
Figure 4-12. Building Alarm Terminal Block Connector Assignments 4-13
Figure 4-13. Interface Terminal Cover 4-15
Figure 4-14. Interface Conduit Landing and Wiring Channel 4-16
Figure 4-15. Interface Wiring Access 4-16
Figure 4-16. Pull Chain Terminal Block Connector Assignments 4-17
Figure 4-18. REPO Switch 4-20
Figure 4-19. REPO Terminal Block Connector Assignments 4-21
Figure 4-20. Normally-Open REPO Switch Wiring 4-22
Figure 4-21. Normally-Closed REPO Switch Wiring 4-23
Figure 4-22. Battery Location 4-24
Figure 4-23. Battery Section 4-25
Figure 4-24. Battery String Connections 4-25
Figure 5-1. Main Elements of the UPS System 5-1
Figure 5-2. Path of Current Through the UPS in standard Normal Mode 5-3
Figure 5-3. Path of Current Through the UPS in Bypass Mode 5-4
Figure 5-4. Path of Current Through the UPS in Battery Mode 5-5
Figure 5-5. UPS System Oneline – Internal Battery 5-7
Figure 5-6. UPS System Oneline – External Battery 5-8
Figure 6-1. UPS Controls and Indicators 6-1
Figure 6-2. UPS Breakers 6-2
Figure 6-3. UPS Control Panel 6-3
Figure 6-8. Maintenance Bypass Switch 6-15
Figure 6-9. REPO Operation 6-18
Figure 7-1. Optional Mini-Slot Cards 7-1
Figure 8-1. Air Filter Location 8-3

This page intentionally left blank.

List of Tables

Table 3-1. UPS Cabinet Weights 3-2
Table 3-2. UPS Cabinet Clearances 3-2
Table 3-3. Air Conditioning or Ventilation Requirements During Full Load Operation 3-2
Table 3-4. Input/Output Ratings and External Wiring Requirements for the Eaton 9E–20, 9E–30/20, and 9E–30/30 . . 3-7
Table 3-5. UPS External Power Cable Terminations for the Eaton 9E–20, 9E–30/20, and 9E–30/30 3-8
Table 3-6. Power Cable Conduit Requirements 3-9
Table 3-7. Recommended Input Circuit Breaker Ratings 3-9
Table 3-8. Recommended Bypass and Output Circuit Breaker Ratings 3-10
Table 3-9. Battery Type 3-11
Table 4-1. Building Alarm Connections 4-13
Table 4-2. Pull Chain Connections 4-17
Table 4-3. REPO Connections 4-21
Table 4-4. Normally-Open REPO Wire Terminations 4-22
Table 4-5. Normally-Closed REPO Wire Terminations 4-22
Table 6-1. Status Indicators 6-3
Table 6-2. Display Function Menu Map 6-6
Table 6-3. Display Menu Operation 6-7
Table 6-4. Command Menu Operation 6-10
Table 6-5. Typical System Status Messages 6-10

This page intentionally left blank.

Chapter 1 Introduction

The Eaton® 9E 20–30 kVA uninterruptible power supply (UPS) is a true online, continuous-duty, transformerless, double-conversion, solid-state, three-phase system, providing conditioned and uninterruptible AC power to protect the customer's load from power failures.

The Eaton 9E 20–30 kVA online power protection system is used to prevent loss of valuable electronic information, minimize equipment downtime, and minimize the adverse effect on production equipment due to unexpected power problems.

The Eaton 9E 20–30 kVA UPS continually monitors incoming electrical power and removes the surges, spikes, sags, and other irregularities that are inherent in commercial utility power. Working with a building's electrical system, the UPS system supplies clean, consistent power that sensitive electronic equipment requires for reliable operation. During brownouts, blackouts, and other power interruptions, batteries provide emergency power to safeguard operation.

The UPS is housed in a single free-standing cabinet, with safety shields behind the door for hazardous voltage protection. Figure 1-1 shows the Eaton 9E 20–30 kVA UPS.

NOTE 1 Startup may be performed by the customer's battery qualified electrical contractor for single (not parallel) UPS installations without any accessory cabinets such as an External Battery Cabinet.

NOTE 2 Startup and operational checks for parallel systems or installations with accessory cabinets must be performed by an authorized Eaton Customer Service Engineer, or the warranty terms specified on page W-1 become void. This service is offered as part of the sales contract for the UPS. Contact an Eaton service representative in advance (usually a two-week notice is required) to reserve a preferred startup date.

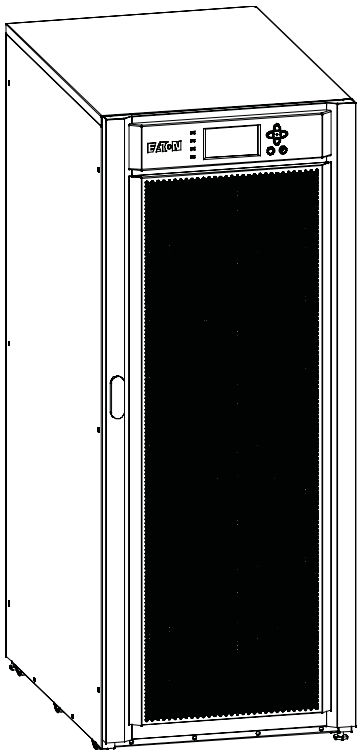

Figure 1-1. Eaton 9E UPS (20–30 kVA)

1.1 UPS Standard Features

The UPS has many standard features that provide cost-effective and consistently reliable power protection. The descriptions in this section provide a brief overview of the UPS standard features.

1.1.1 Installation Features

Power wiring can be routed to the back of the cabinet with connections made to easily accessible terminals. Control wiring is routed through the top of the cabinet and must be installed in accordance with Class 1 wiring methods.

1.1.2 Control Panel

The control panel, located on the front of the UPS, contains a liquid crystal display (LCD) and pushbutton switches to control the operation of the UPS and to display the status of the UPS system. See Chapter 6, "UPS Operating Instructions," for additional information.

1.1.3 Customer Interface

- **Building Alarm Monitoring** – Up to three inputs in the UPS are available to connect the facility's alarm system contacts. Some system configurations may limit the number of inputs available. The UPS uses these inputs to monitor the building alarms in addition to the UPS status. See Chapter 7, "Communication," for additional information.
- **Mini-Slot Communication Bays** – Two communication bays are standard equipment. One to two optional Mini-Slot®connectivity cards can be installed in the UPS module at any time. Mini-Slot cards are quickly installed at the rear of the UPS and are hot-pluggable. See Chapter 7, "Communication," for additional information.

1.1.4 High-Efficiency Normal Mode

The 9E Series UPS offers a High-Efficiency (HE) normal mode with double-conversion on demand that allows the UPS to operate in standby bypass mode. This mode allows the 9E UPS to achieve 98% efficiency while still protecting the load. High-efficiency mode is the default normal operating mode. See Chapter 6, "UPS Operating Instructions," for additional information.

1.1.5 Advanced Battery Management

A three-stage charging system increases battery service life by optimizing recharge time, and protects batteries from damage due to high current charging and inverter ripple currents. Charging at high currents can overheat and damage batteries.

1.2 Options and Accessories

Contact an Eaton sales representative for information about the following options.

1.2.1 External Battery Cabinet

Battery backup protection with additional runtime can be provide by equipping the UPS system with up to two External Battery Cabinets (EBCs) containing sealed lead-acid, maintenance-free batteries. The EBCs are available with two or three battery strings. The EBCs are housed in single, free-standing cabinets designed for line-up-and-match installation, but may be installed separate from the UPS cabinet. The recommended installation location for adjacent battery cabinets is on the right side of the UPS cabinet.

1.2.2 Integrated Accessory Cabinet-Distribution

The Integrated Accessory Cabinet-Distribution (IAC-D) provides power distribution with a 42-pole distribution panel and up to three optional 3-pole 125A subfeed breakers. The IAC-D is housed in a single, free-standing cabinet designed for line-up-and-match installation, but may be installed separate from the UPS cabinet. The recommended installation location for an adjacent IAC-D is to the left of the UPS cabinet.

1.2.3 Integrated Transformer Cabinet

An single transformer Integrated Transformer Cabinet (ITC) provides three-phase 480 Vac input to three-phase 208Y/120 Vac output voltage transformation and isolation for input to the Eaton 9E UPS. An optional Dual transformer ITC adds three-phase 208 Vac input to three-phase 480Y/277 Vac output voltage transformation and isolation for output to the critical load. The ITC is housed in a single, free-standing cabinet designed for line-up-and-match installation, but may be installed separate from the UPS cabinet. The recommended installation location for an adjacent ITC is to the left of the UPS cabinet.

1.2.4 Integrated Accessory Cabinet-Bypass

An Integrated Accessory Cabinet-Bypass (IAC-B) provides maintenance bypass functions. The IAC-B is available in a three breaker configuration enabling power to completely bypass the UPS. The UPS can then be safely serviced or replaced without interrupting power to critical systems. A four breaker configuration is available to provide a convenient method for removing power from the UPS when using the maintenance bypass to supply the load. The IAC-B is housed in a single, free-standing cabinet designed for line-up-and-match installation, but may be installed separate from the UPS cabinet. The recommended installation location for an adjacent IAC-B is to the left of the UPS cabinet.

1.2.5 Integrated Accessory Cabinet-Tie

An Integrated Accessory Cabinet-Tie (IAC-T) provides the ability to parallel up to four UPSs together for increased capacity and/or redundant capability. The IAC-T is housed in a single, free-standing cabinet designed for line-up-and-match installation, but may be installed separate from the UPS cabinet. The recommended installation location for an adjacent IAC-T is to the left of the UPS cabinet.

1.2.6 Integrated Accessory Cabinet-Tie and Bypass

An Integrated Accessory Cabinet-Tie and Bypass (IAC-TB) provides the ability to parallel two UPSs together for increased capacity and/or redundant capability. In addition, maintenance bypass functions enable power to completely bypass the UPS power module. The IAC-T is housed in a single, free-standing cabinet designed for line-up-and-match installation, but may be installed separate from the UPS cabinet. The recommended installation location for an adjacent IAC-T is to the left of the UPS cabinet.

1.2.7 Parallel System

NOTE All UPSs in a parallel system must have the same battery configuration.

A parallel UPS system with up to four UPSs can be installed to provide a parallel capacity and/or redundant system. This load sharing system provides more capacity than a single UPS, and can provide backup, depending on the load and configuration. In addition, when one UPS is taken out of service for maintenance or is not operating properly, a redundant UPS continues to supply uninterrupted power to the critical load. A Controller Area Network (CAN) provides connectivity for system metering and operational mode control. The parallel system consists of two to four UPSs each with a parallel CAN, and either a IAC-T or IAC-TB to act as a tie point and to control the output.

1.2.8 Reduced Battery String Model

The Eaton 9E–20 model is configured with four battery strings instead of six to optimize the run time for 20 kVA with a subsequent reduction in cost and weight. If increased battery run time is required in the future, an upgrade kit is available to increase the internal battery system to six strings, converting the Eaton 9E–20 to a Eaton 9E–30/20. After the upgrade kit is installed, the Eaton 9E–30/20 is also upgradable to a Eaton 9E–30/30 with a firmware upgrade installed by an authorized Eaton Customer Service Engineer.

1.2.9 Monitoring and Communication

Mini-Slot Cards – Optional Mini-Slot® cards support several protocols, such as SNMP, HTTP, Modbus® and RS232.

See Chapter 7, "Communication," for additional information on monitoring and communication features.

1.2.10 Dual Feed

Optional dual-feed input terminals are available to provide a separate bypass feed to the UPS.

1.2.11 Maintenance Bypass

The optional internal Maintenance Bypass consists of a Bypass circuit breaker used to control the AC input to the UPS bypass and a Maintenance Bypass switch used to partially isolate the UPS so that a limited number of components can be serviced without interrupting power to critical systems.

1.3 Battery System

The battery system is internal to the UPS cabinet or can be an external cabinet. Internal and external batteries can not be used at the same time. All UPSs in a parallel system must have the same battery configuration. The battery system provides emergency short-term backup power to safeguard operation during brownouts, blackouts, and other power interruptions. The battery system is equipped with lead-acid batteries.

1.4 Basic System Configurations

The following basic UPS system configurations are possible:

- Single UPS with internal batteries
- Single UPS with one or two external battery cabinets
- Single UPS with internal batteries and accessory cabinets
- Single UPS with one or two external battery cabinets and accessory cabinets

The UPS system configuration can be enhanced by adding optional accessories such as a Remote Emergency Power-off (REPO) control or Mini-Slot communication cards.

1.5 Using This Manual

This manual describes how to install and operate the Eaton 9E 20–30 kVA. Read and understand the procedures described in this manual to ensure trouble-free installation and operation. In particular, be thoroughly familiar with the REPO procedure (see paragraph 6.3.13).

The information in this manual is divided into sections and chapters. The system, options, and accessories being installed dictate which parts of this manual should be read. At a minimum, Chapters 1 through 4 and Chapter 6 should be examined.

Read through each procedure before beginning the procedure. Perform only those procedures that apply to the UPS system being installed or operated.

1.6 Conventions Used in This Manual

This manual uses these type conventions:

- **Bold type** highlights important concepts in discussions, key terms in procedures, and menu options, or represents a command or option that you type or enter at a prompt.
- Italic type highlights notes and new terms where they are defined.
- `Screen type` represents information that appears on the screen or LCD.

Icon	Description
Note	Information notes call attention to important features or instructions.
[Keys]	Brackets are used when referring to a specific key, such as [Enter] or [Ctrl].

In this manual, the term UPS refers only to the UPS cabinet and its internal elements. The term UPS system refers to the entire power protection system – the UPS cabinet, an external battery system, and options or accessories installed.

1.7 Symbols, Controls, and Indicators

The following are examples of symbols used on the UPS or accessories to alert you to important information:

RISK OF ELECTRIC SHOCK - Observe the warning associated with the risk of electric shock symbol.

CAUTION: REFER TO OPERATOR'S MANUAL - Refer to your operator's manual for additional information, such as important operating and maintenance instructions.

This symbol indicates that you should not discard the UPS or the UPS batteries in the trash. This product contains sealed, lead-acid batteries and must be disposed of properly. For more information, contact your local recycling/reuse or hazardous waste center.

This symbol indicates that you should not discard waste electrical or electronic equipment (WEEE) in the trash. For proper disposal, contact your local recycling/reuse or hazardous waste center.

1.8 For More Information

Refer to the *Eaton 9E External Battery Cabinet Installation Manual* for the following additional information:

- Installation instructions, including site preparation, planning for installation, wiring and safety information, and detailed illustrations of cabinets with dimensional and connection point drawings

Refer to the *Eaton 9E Integrated Accessory Cabinet-Distribution Installation and Operation Manual* for the following additional information:

- Installation instructions, including site preparation, planning for installation, wiring and safety information, and detailed illustrations of cabinets with dimensional and connection point drawings
- Operation, including breakers, standard features and optional accessories, procedures for using the tie and bypass functions, and information about maintenance

Refer to the *Eaton 9E Integrated Transformer Cabinet Installation Manual* for the following additional information:

- Installation instructions, including site preparation, planning for installation, wiring and safety information, and detailed illustrations of cabinets with dimensional and connection point drawings

Refer to the *Eaton 9E Integrated Accessory Cabinet-Tie and Bypass Installation and Operation Manual* for the following additional information:

- Installation instructions, including site preparation, planning for installation, wiring and safety information, and detailed illustrations of cabinets with dimensional and connection point drawings
- Operation, including breakers, standard features and optional accessories, procedures for using the tie and bypass functions, and information about maintenance

Visit www.eaton.com/powerquality or contact an Eaton service representative for information on how to obtain copies of these manuals.

1.9 Getting Help

If help is needed with any of the following:

- Scheduling initial startup
- Regional locations and telephone numbers
- A question about any of the information in this manual
- A question this manual does not answer

Please call the Help Desk at:

United States:	**1-800-843-9433**
Canada:	**1-800-461-9166 ext 260**
All other countries:	**Call your local service representative**

Chapter 2 Safety Warnings

IMPORTANT SAFETY INSTRUCTIONS SAVE THESE INSTRUCTIONS

This manual contains important instructions that should be followed during installation and maintenance of the UPS and batteries. Read all instructions before operating the equipment and save this manual for future reference.

The UPS is designed for industrial or computer room applications, and contains safety shields behind the door and front panels. However, the UPS is a sophisticated power system and should be handled with appropriate care.

DANGER

This UPS contains LETHAL VOLTAGES. All repairs and service should be performed by AUTHORIZED SERVICE PERSONNEL ONLY. There are NO USER SERVICEABLE PARTS inside the UPS.

WARNING

- The UPS is powered by its own energy source (batteries). The output terminals may carry live voltage even when the UPS is disconnected from an AC source.
- To reduce the risk of fire or electric shock, install this UPS in a temperature and humidity controlled, indoor environment, free of conductive contaminants. Ambient temperature must not exceed 30°C (86°F). Do not operate near water or excessive humidity (95% maximum). The system is not intended for outdoor use.
- As a result of the connected loads high leakage current is possible. Connection to earth ground is required for safety and proper product operation. Do not check UPS operation by any action that includes removal of the earth (ground) connection with loads attached.
- Ensure all power is disconnected before performing installation or service.
- Batteries can present a risk of electrical shock or burn from high short-circuit current. The following precautions should be observed: 1) Remove watches, rings, or other metal objects; 2) Use tools with insulated handles; 3) Do not lay tools or metal parts on top of batteries; 4) Wear rubber gloves and boots.
- ELECTRIC ENERGY HAZARD. Do not attempt to alter any UPS or battery wiring or connectors. Attempting to alter wiring can cause injury.
- Do not open or mutilate batteries. Released electrolyte is harmful to the skin and eyes. It may be toxic.

CAUTION

- Installation or servicing should be performed by qualified service personnel knowledgeable of UPS and battery systems, and required precautions. Keep unauthorized personnel away from equipment. Consider all warnings, cautions, and notes before installing or servicing equipment. DO NOT DISCONNECT the batteries while the UPS is in Battery mode.
- Replace batteries with the same number and type of batteries as originally installed with the UPS.
- Disconnect the charging source prior to connecting or disconnecting terminals.

- Determine if the battery is inadvertently grounded. If it is, remove the source of the ground. Contacting any part of a grounded battery can cause a risk of electric shock. An electric shock is less likely if you disconnect the grounding connection before you work on the batteries.
- Proper disposal of batteries is required. Refer to local codes for disposal requirements.
- Do not dispose of batteries in a fire. Batteries may explode when exposed to flame.
- Keep the UPS door closed and front panels installed to ensure proper cooling airflow and to protect personnel from dangerous voltages inside the unit.
- Do not install or operate the UPS system close to gas or electric heat sources.
- The operating environment should be maintained within the parameters stated in this manual.
- Keep surroundings uncluttered, clean, and free from excess moisture.
- Observe all DANGER, CAUTION, and WARNING notices affixed to the inside and outside of the equipment.

AVERTISSEMENT!

- Les batteries peuvent présenter un risque de décharge électrique ou de brûlure par des courts–circuits de haute intensité. Prendre les précautions nécessaires.
- Pour le replacement, utiliser le même nombre et modéle des batteries.

ATTENTION!

- Une mise au rebut réglementaire des batteries est obligatoire. Consulter les règlements en vigueur dans votre localité.
- Ne jamais jeter les batteries au feu. L'exposition aux flammes risque de les faire exploser.

Section 1
Installation

Chapter 3 UPS Installation Plan and Unpacking

Use the following basic sequence of steps to install the UPS:

1. Create an installation plan for the UPS system (Chapter 3).
2. Prepare your site for the UPS system (Chapter 3).
3. Inspect and unpack the UPS cabinet (Chapter 3).
4. Unload and install the UPS cabinet, and wire the system (Chapter 4).
5. Install features, accessories, or options, as applicable (Chapter 4).
6. Complete the Installation Checklist (Chapter 4).
7. Have authorized service personnel perform preliminary operational checks and start up the system.

NOTE 1 Startup may be performed by the customer's battery qualified electrical contractor for single (not parallel) UPS installations without any accessory cabinets such as an External Battery Cabinet.

NOTE 2 Startup and operational checks for parallel systems or installations with accessory cabinets must be performed by an authorized Eaton Customer Service Engineer, or the warranty terms specified on page W-1 become void. This service is offered as part of the sales contract for the UPS. Contact an Eaton service representative in advance (usually a two-week notice is required) to reserve a preferred startup date.

3.1 Creating an Installation Plan

Before installing the UPS system, read and understand how this manual applies to the system being installed. Use the procedures and illustrations in paragraph 3.2 and Chapter 4 to create a logical plan for installing the system.

3.2 Preparing the Site

For the UPS system to operate at peak efficiency, the installation site should meet the environmental parameters outlined in this manual. If the UPS is to be operated at an altitude higher than 1500m (5000 ft), contact an Eaton service representative for important information about high altitude operation. The operating environment must meet the weight, clearance, and environmental requirements specified.

3.2.1 Environmental and Installation Considerations

The UPS system installation must meet the following guidelines:

- The system must be installed on a level floor suitable for computer or electronic equipment.
- The system must be installed in a temperature and humidity controlled indoor area free of conductive contaminants.

Failure to follow guidelines may void your warranty.

The UPS equipment operating environment must meet the weight requirements shown in Table 3-1 and the size requirements shown in Figure 3-1 through Figure 3-4. Dimensions are in millimeters (inches).

Table 3-1. UPS Cabinet Weights

Model	Weight kg (lb) Shipping	Installed	Point Loading
Eaton 9E–20 with internal batteries	441 (972)	377 (831)	6 at 63 (139)
Eaton 9E–30/20 with internal batteries	540 (1190)	476 (1049)	6 at 79 (175)
Eaton 9E–30/30 with internal batteries			
Eaton 9E–20 without batteries	261 (575)	197 (434)	6 at 33 (72)
Eaton 9E–30/20 without batteries			
Eaton 9E–30/30 without batteries			

The UPS cabinet uses forced air cooling to regulate internal component temperature. Air inlets are in the front of the cabinet and outlets are in the back of the cabinet. Allow clearance in front of and in back of the cabinet for proper air circulation. The clearances required around the UPS cabinet are shown in Table 3-2.

Table 3-2. UPS Cabinet Clearances

From Top of Cabinet	304.8 mm (12") working space
From Front of Cabinet	914.4 mm (36") working space
From Back of Cabinet	Minimum of 203.2 mm (8") for operation Recommended 914.4 mm (36") for service Clearances must comply with all applicable national and local codes. Flexible conduit may be used to adjust between required operation and service clearances.
From Right Side of Cabinet	None Required
From Left Side of Cabinet	None Required

The basic environmental requirements for operation of the UPS are:

- Ambient Temperature Range: 0–30°C (32–86°F)
- Recommended Operating Range: 20–25°C (68–77°F)
- Maximum Relative Humidity: 95%, noncondensing

⚠ CAUTION

If battery systems are located in the same room as the UPS, the battery manufacturer's environmental requirements should be followed if they are more stringent than the UPS requirements. Operating temperatures above the recommended range will result in decreased battery life and performance, and may reduce or void the battery warranty.

The UPS ventilation requirements are shown in Table 3-3.

Table 3-3. Air Conditioning or Ventilation Requirements During Full Load Operation

Model	Rating	Input/Output Voltage	Heat Rejection BTU/hr x1000 (kg-cal/hr)
Eaton 9E–20	20 kVA	208/208	4.647 (1171)
Eaton 9E–30/20			
Eaton 9E–30/30	30 kVA	208/208	6.970 (1756)

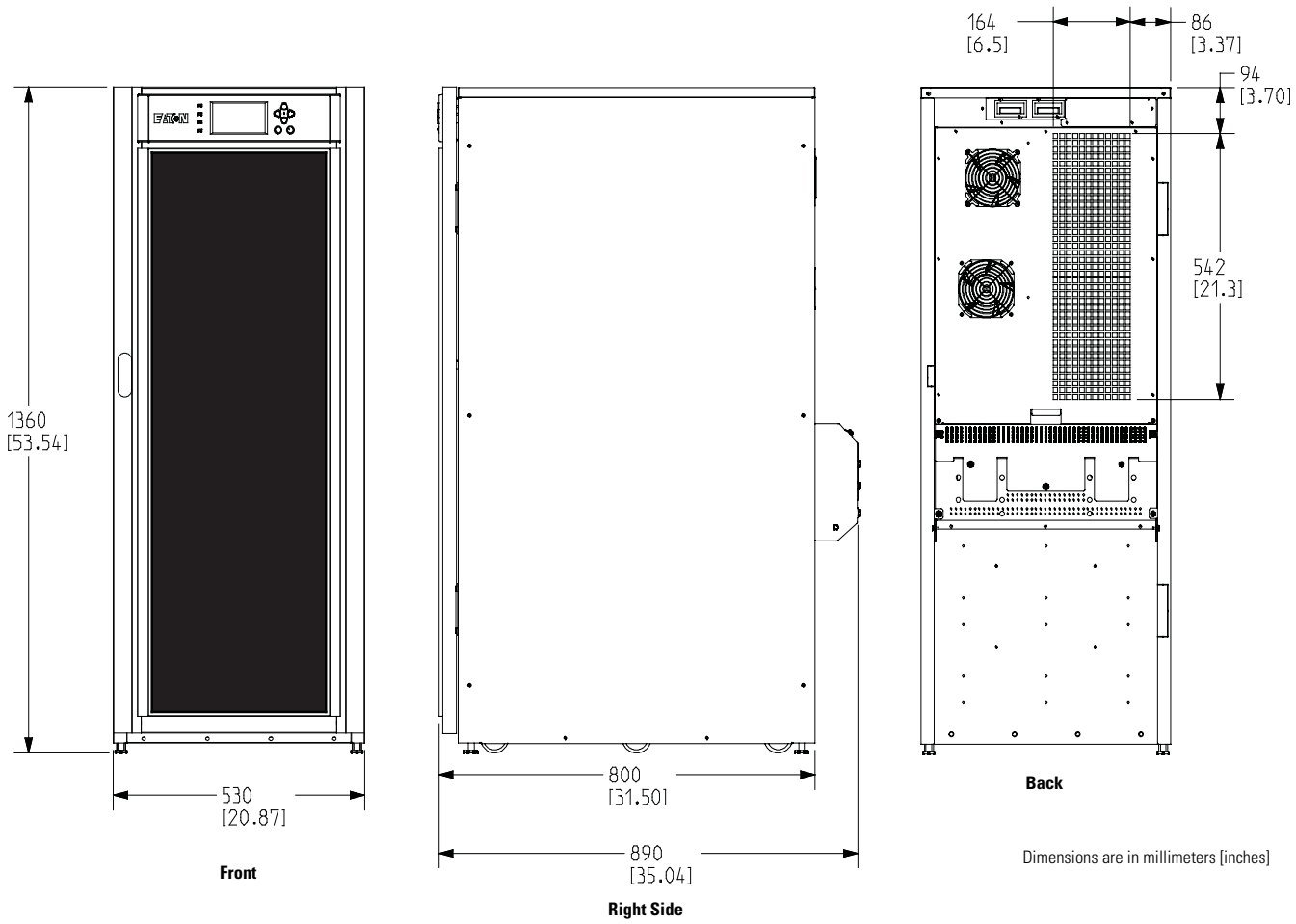

Figure 3-1. UPS Cabinet Dimensions (Front and Right Side Views)

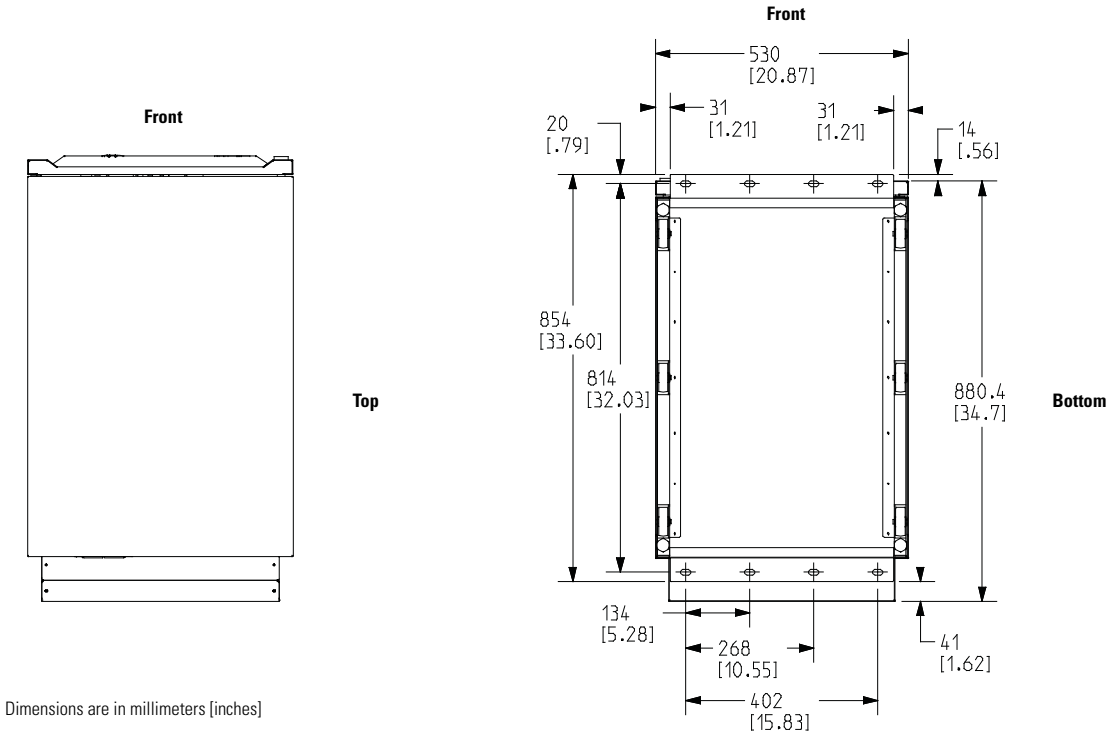

Figure 3-2. UPS Cabinet Dimensions (Top and Bottom Views)

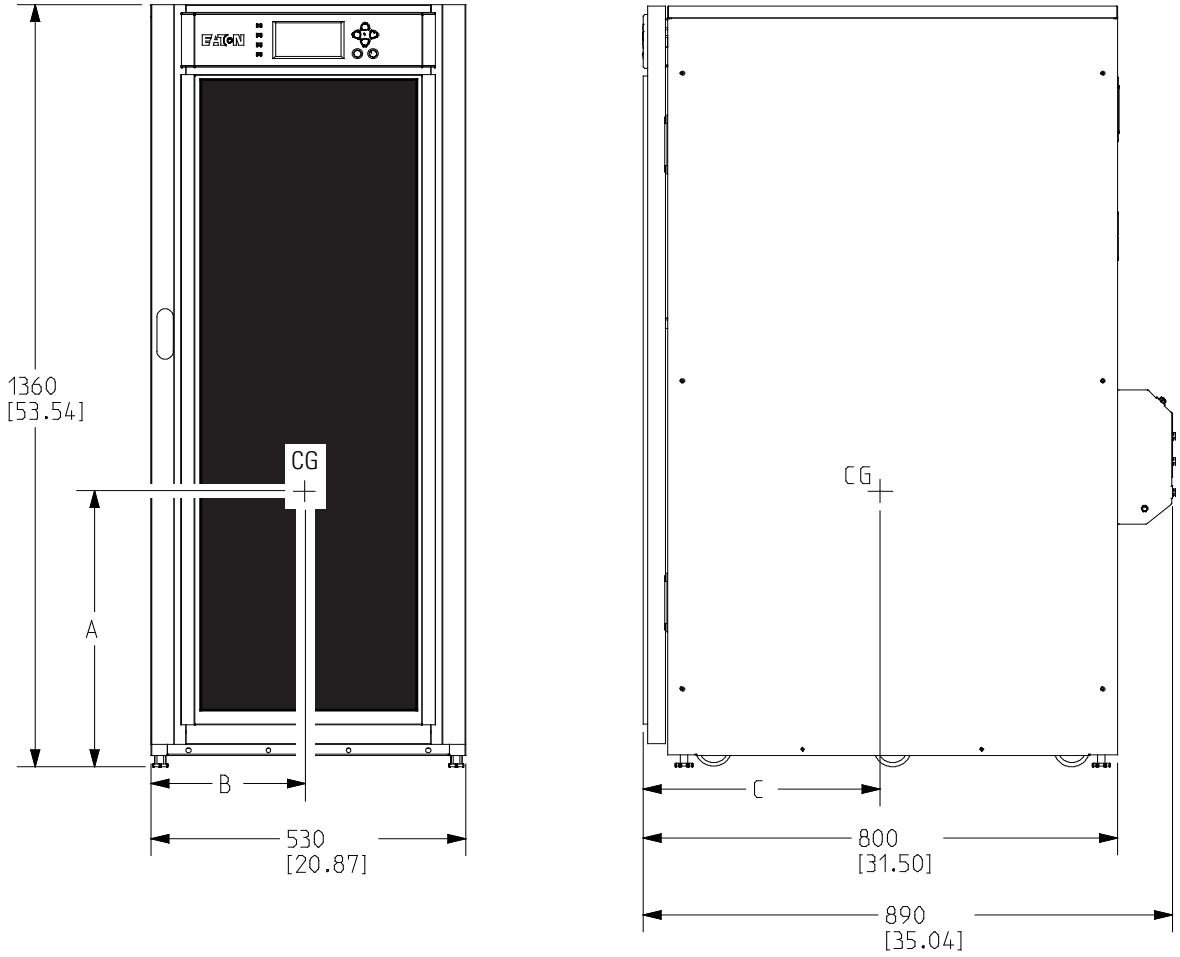

Weight and Center of Gravity

	A	B	C	Weight kg (lb)
With Batteries (9E–20 – 4 strings)	517 (20.4)	259 [10.20]	399 [15.71]	377 (831)
With Batteries (9E–30/20 and 9E–30/30 – 6 strings)	477 [17.60]	259 [10.20]	399 [15.71]	476 (1049)
Without Batteries	657 [25.87]	249 [9.80]	399 [15.71]	197 (434)

Dimensions are in millimeters [inches]

Figure 3-3. UPS Cabinet Center of Gravity

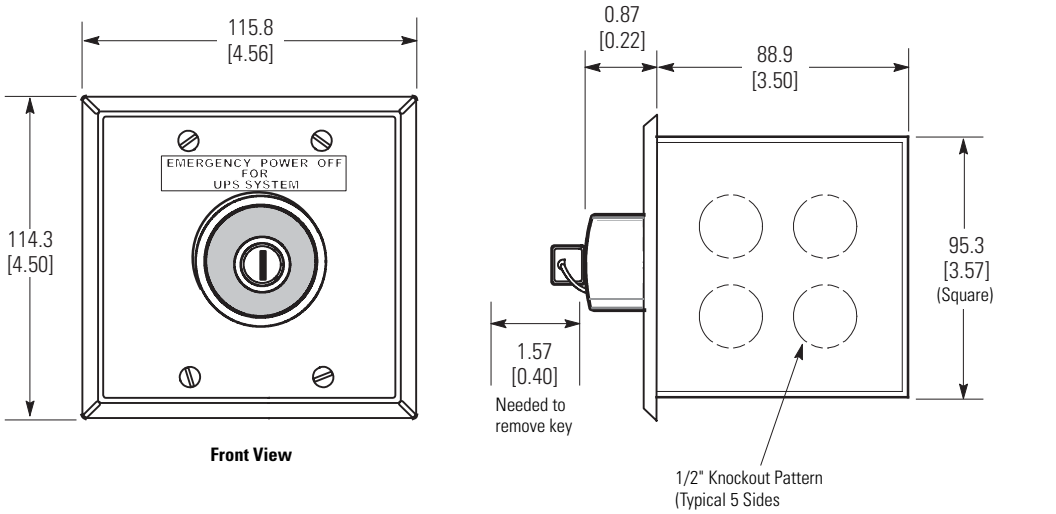

Figure 3-4. Remote EPO Switch Dimensions

3.2.2 UPS System Power Wiring Preparation

Read and understand the following notes while planning and performing the installation:

WARNING

As a result of the connected loads high leakage current is possible. Connection to earth ground is required for safety and proper product operation. Do not check UPS operation by any action that includes removal of the earth (ground) connection with loads attached.

- Refer to national and local electrical codes for acceptable external wiring practices.
- To allow for future kVA upgrades, consider installing a derated UPS using wiring and external overcurrent protection breakers sized for a fully rated UPS.
- For external wiring, use 90°C copper wire. Wire sizes listed in Table 3-4 are for copper wiring only. If wire is run in an ambient temperature greater than 30°C, higher temperature wire and/or larger size wire may be necessary. Wire sizes are based on using the specified breakers.
- Wire ampacities are chosen from Table 310-16 of the National Electrical Code® (NEC®). Specification is for copper wire with a 90°C rating.
- Material and labor for external wiring requirements are to be supplied by designated personnel.
- If installing an external maintenance bypass, all feeds to the UPS including the Rectifier Input Breaker (RIB) (if installed) must have a service disconnect independent of the maintenance bypass power path. Most maintenance bypass solutions provide UPS input feeds derived from but isolated from the maintenance bypass power path. If the maintenance bypass solution being installed does not provide such functionality, DO NOT use a single feeder breaker to supply both the UPS and the maintenance bypass.

- The bypass feed into this equipment uses four wires. The rectifier feed into this equipment uses four wires. The phases must be symmetrical about ground (from a Wye source) for proper equipment operation.
- Parallel UPS input wiring size requirements and output wiring size requirements from the UPSs to the Integrated Accessory Cabinet-Tie (IAC-T) or Integrated Accessory Cabinet-Tie and Bypass (IAC-TB) are the same as listed in Table 3-4. Refer to the *Eaton 9E Integrated Accessory Cabinet-Tie and Bypass Installation and Operation Manual* listed in paragraph 1.8 for additional IAC-T or IAC-TB wiring and termination requirements.

For external wiring requirements, including the minimum AWG size of external wiring, see Table 3-4. Wire sizes listed are for copper wiring only.

Table 3-4. Input/Output Ratings and External Wiring Requirements for the Eaton 9E–20, 9E–30/20, and 9E–30/30

		Units	Rating 50/60 Hz	
Basic Unit Rating		kVA kW	20 16	30 24
Input and Output Voltage		Volts	208/208	208/208
AC Input to UPS Rectifier (0.98 Minimum pF)		Amps	64	96
Full load current plus battery recharge current (3) Phases, (1) Neutral, (1) Ground	**A**			
Minimum Conductor Size (Phase A, B, and C) Number per Phase		AWG or kcmil (each)	2 (1)	1/0 (1)
Minimum Conductor Size (Neutral) Number per Phase	–	AWG or kcmil (each)	2 (2)	1/0 (2)
Minimum Conductor Size (Ground) Number per Phase	–	AWG or kcmil (each)	6 (1)	6 (1)
AC Input to UPS Bypass (Five Wire, Dual-Feed)		Amps	56	83
Full Load Current (3) Phases, (1) Neutral, (1) Ground	**B**			
Minimum Conductor Size (Phase A, B, and C) Number per Phase		AWG or kcmil (each)	2 (1)	1/0 (1)
Minimum Conductor Size (Neutral) Number per Phase	–	AWG or kcmil (each)	2 (2)	1/0 (2)
Minimum Conductor Size (Ground) Number per Phase	–	AWG or kcmil (each)	6 (1)	6 (1)
DC Input from External Battery		Total Amps	79	124
(1) Positive, (1) Negative, (1) Ground	**C**			
Minimum Conductor Size (Phase Positive and Negative) Number per Pole		AWG or kcmil (each)	2 (1)	1/0 (1)
Minimum Conductor Size (Ground) Number per Phase	–	AWG or kcmil (each)	6 (1)	6 (1)
AC Output to Critical Load (Five Wire)		Amps	56	83
Full Load Current (3) Phases, (1) Neutral, (1) Ground	**D**			
Minimum Conductor Size (Phase A, B, and C) Number per Phase		AWG or kcmil (each)	2 (1)	1/0 (1)
Minimum Conductor Size (Neutral) Number per Phase	–	AWG or kcmil (each)	2 (2)	1/0 (2)
Minimum Conductor Size (Ground) Number per Phase	–	AWG or kcmil (each)	6 (1)	6 (1)

NOTE Callout letters **A**, **B**, and **D** map to Figure 5-5. Callout letters **A**, **B**, **C**, and **D** map to Figure 5-6.

The power wiring terminals are pressure terminations, UL and CSA rated at 90°C. See Table 3-5 for external power cable terminations.

Figure 4-7 and Figure 4-8 show the location of the UPS power cable terminals.

Table 3-5. UPS External Power Cable Terminations for the Eaton 9E–20, 9E–30/20, and 9E–30/30

Terminal Function	Terminal	Function	Number and Size of Pressure Termination AWG or kcmil	Tightening Torque Nm (lb in)	Screw Size and Type
AC Input to UPS Rectifier	L1	Phase A	1 – #14-2/0	12.4 (110)	3/16 in. Hex
	L2	Phase B	1 – #14-2/0	12.4 (110)	3/16 in. Hex
	L3	Phase C	1 – #14-2/0	12.4 (110)	3/16 in. Hex
	N	Neutral	2 – #14-2/0	12.4 (110)	3/16 in. Hex
AC Input to Bypass	L1	Phase A	1 – #14-2/0	12.4 (110)	3/16 in. Hex
	L2	Phase B	1 – #14-2/0	12.4 (110)	3/16 in. Hex
	L3	Phase C	1 – #14-2/0	12.4 (110)	3/16 in. Hex
	N	Neutral	2 – #14-2/0	12.4 (110)	3/16 in. Hex
AC Output to Critical Load	L1	Phase A	1 – #14-2/0	12.4 (110)	3/16 in. Hex
	L2	Phase B	1 – #14-2/0	12.4 (110)	3/16 in. Hex
	L3	Phase C	1 – #14-2/0	12.4 (110)	3/16 in. Hex
	N	Neutral	2 – #14-2/0	12.4 (110)	3/16 in. Hex
DC Input from External Battery	+	Battery (+)	1 – #6-350	31.1 (275)	5/16 in. Hex
	–	Battery (-)	1 – #6-350	31.1 (275)	5/16 in. Hex
Customer Ground	Ground	Ground	4 – #14-1/0	5.1 (45)	Slotted

NOTE Customer ground, sized in accordance with NEC Table 250.122, can be run in any conduit listed in Table 3-6.

Conduit sizes were chosen from NEC Table 4, Electrical Metallic Tubing (EMT). See Table 3-6 for conduit requirements.

Per NEC article 300, 3(B)(1), all three-phase conductors must be run in the same conduit. Neutral and ground must be run in the same conduit as the phase conductors.

Conduit is sized to accommodate one neutral conductor the same size as the phase conductor and one ground conductor sized in accordance with NEC Table 250.122.

Conduit sizes listed are for copper wiring only.

Table 3-6. Power Cable Conduit Requirements

UPS Model	Voltage	Terminal	Number of Wires in Conduit	Minimum Conduit Trade Size	Number of Conduits
Eaton 9E–20 Eaton 9E–30/20	208 Vac	AC Input to UPS Rectifier (A, B, C, Neutral, Ground)	5	1-1/2	1
		AC Input to Bypass and Output (Five Wire) (A, B, C, Neutral, Ground)	5	1-1/2	1
	DC	Battery (Positive, Negative, Ground)	3	1-1/2	1
Eaton 9E–30/30	208 Vac	AC Input to UPS Rectifier (A, B, C, Neutral, Ground)	5	2	1
		AC Input to Bypass and Output (Five Wire) (A, B, C, Neutral, Ground)	5	2	1
	DC	Battery (Positive, Negative, Ground)	3	2	1

External overcurrent protection and disconnect are not provided by this product, but are required by codes. Refer to Table 3-4 for wiring requirements. If an output lockable disconnect is required, it is to be supplied by the customer.

Table 3-7 lists the recommended rating for input circuit breakers.

Table 3-7. Recommended Input Circuit Breaker Ratings

	Input Rating	
UPS Mode	Load Rating	208V
Eaton 9E–20	80% Rated	100A
Eaton 9E–30/20	100% Rated	80A
Eaton 9E–30/30	80% Rated	125A
	100% Rated	100A

⚠ CAUTION

To reduce the risk of fire, connect only to a circuit provided with maximum input circuit breaker current ratings from Table 3-7 in accordance with the NEC, ANSI/NFPA 70.

The line-to-line unbalanced output capability of the UPS is limited only by the full load per phase current values for AC output to critical load shown in Table 3-4. The recommended line-to-line load unbalance is 50% or less.

Bypass and output overcurrent protection and bypass and output disconnect switches are to be supplied by the customer. Table 3-8 lists the recommended rating for bypass and output circuit breakers.

Table 3-8. Recommended Bypass and Output Circuit Breaker Ratings

	Output Rating	
UPS Model	**Load Rating**	**208V**
Eaton 9E–20	80% Rated	100A
Eaton 9E–30/20	100% Rated	80A
Eaton 9E–30/30	80% Rated	125A
	100% Rated	100A

There is no manual DC disconnect device within the UPS.

Battery voltage is computed at 2 volts per cell as defined by Article 480 of the NEC. Rated battery current is computed based on 2 volts per cell.

3.2.3 UPS System Interface Wiring Preparation

Control wiring for features and options should be connected at the customer interface terminal blocks located inside the UPS.

⚠ WARNING

Do not directly connect relay contacts to the mains related circuits. Reinforced insulation to the mains is required.

Read and understand the following notes while planning and performing the installation:

- Use Class 1 wiring methods (as defined by the NEC) for interface wiring up to 30V. The wire should be rated for 24V, 1A minimum.
- Use Class 2 wiring methods (as defined by the NEC) for interface wiring from 30V to 600V. The wire should be rated for 600V, 1A minimum. 12 AWG maximum wire size.
- Because of the REPO and building alarm wiring route in the UPS cabinet, the wire should be rated for a minimum of 300V.
- Use twisted-pair wires for each input and return or common.
- All interface wiring and conduit is to be supplied by the customer.
- When installing external interface wiring between a REPO or building alarm and the UPS interface terminals, conduit must be installed between each device and the UPS cabinet.
- Interface wiring can be installed using conduit or by routing wiring through the power terminal cover base wiring channels between the UPS and IAC-T, IAC-B or IAC-TB.
- If using the power terminal wiring channel, keep interface wiring separate from power wiring or use shielded wire.
- If using conduit, install the interface wiring in separate conduit from the power wiring.
- All building alarm inputs require an isolated normally-open contact or switch (rated at 24 Vdc, 20 mA minimum) connected between the alarm input and common terminal. All control wiring and switch contacts are customer-supplied.

- LAN and telephone drops for use with Mini-Slot connectivity cards must be supplied by the customer.
- The REPO feature opens all relays in the UPS cabinet and isolates power from your critical load. Local electrical codes may also require tripping upstream protective devices to the UPS.
- The REPO switch must be a latching-type switch not tied to any other circuits.
- A jumper wire must be connected between pins 3 and 4 on the REPO terminal block if using a normally-closed REPO switch.
- REPO wiring should be a minimum of 22 AWG and a maximum of 14 AWG.
- The REPO switch wiring must be in accordance with NEC Article 725 Class 2 requirements.
- The maximum distance between the REPO and the UPS cannot exceed 150 meters (500 feet).

3.3 Battery Type

The battery types listed in Figure 3-9 are supplied in the UPS Cabinet and external Battery Cabinet. When purchasing UPS Cabinet or external Battery Cabinet without batteries, only the following types are recommended. Use of any other battery type inside Eaton cabinets will void the product warranty. When replacing batteries use the same manufacturer and part number originally supplied with the unit to ensure correct harness fit and terminal landing.

Table 3-9. Battery Type

Battery Manufacturer	CSB Battery Technologies Inc.	G.S. Yuasa
Battery Model	HRL1234WF2FR	REW45-12FR
Battery Quantity 9E–20	72	72
Battery Quantity 9E–30/20	108	108
Battery Quantity 9E–30/30	108	108

3.4 Inspecting and Unpacking the UPS Cabinets

The cabinet is shipped bolted to a wooden pallet and protected with an outer wood container (see Figure 3-5).

WARNING

The UPS cabinet is heavy (see Table 3-1). If unpacking and unloading instructions are not closely followed, the cabinet may tip and cause serious injury.

1. Carefully inspect the outer packaging for evidence of damage during transit.

CAUTION

Do not install a damaged cabinet. Report any damage to the carrier and contact an Eaton service representative immediately.

NOTE For the following step, verify that the forklift or pallet jack is rated to handle the weight of the cabinet (see Table 3-1 for cabinet weight).

2. Use a forklift or pallet jack to move the packaged cabinet to the installation site, or as close as possible, before unpacking. If possible, move the cabinets using the pallet. Insert the forklift or pallet jack forks between the supports on the bottom of the pallet (see Figure 3-3 for the UPS cabinet center of gravity measurements).

⚠ CAUTION

Do not tilt the UPS cabinets more than 10° from vertical or the cabinets may tip over.

3. Set the pallet on a firm, level surface, allowing a minimum clearance of 3m (10 ft) on each side for removing the cabinet from the pallet.
4. Remove the protective wood container from the cabinet:

NOTE For the following steps, use pincer type pliers or a large flat blade screw driver to straighten the securing tabs.

   a. Straighten the tabs securing the top panel of the wooden container to the side panels of the container.
   b. Remove the top panel and retain for later use as a ramp in unloading the cabinet from the pallet.
   c. Straighten the tabs securing the side panels of the container to the front and back panels of the container.
   d. Remove the side panels.
   e. Straighten the tabs securing the front and back panels of the container to the bottom of the container.
   f. Remove the front and back panels.
5. Remove the inner protective packaging. Retain the parts kit box, ramp brackets, and ramp extension packed at the top of the cabinet.
6. Recycle the remainder of the outer shipping container and the inner protective packaging in a responsible manner.
7. Inspect the contents for any evidence of physical damage, and compare each item with the Bill of Lading. If damage has occurred or shortages are evident, contact an Eaton service representative immediately to determine the extent of the damage and its impact on further installation.

NOTE While waiting for installation, protect the unpacked cabinet from moisture, dust, and other harmful contaminants. Failure to store and protect the UPS properly may void your warranty.

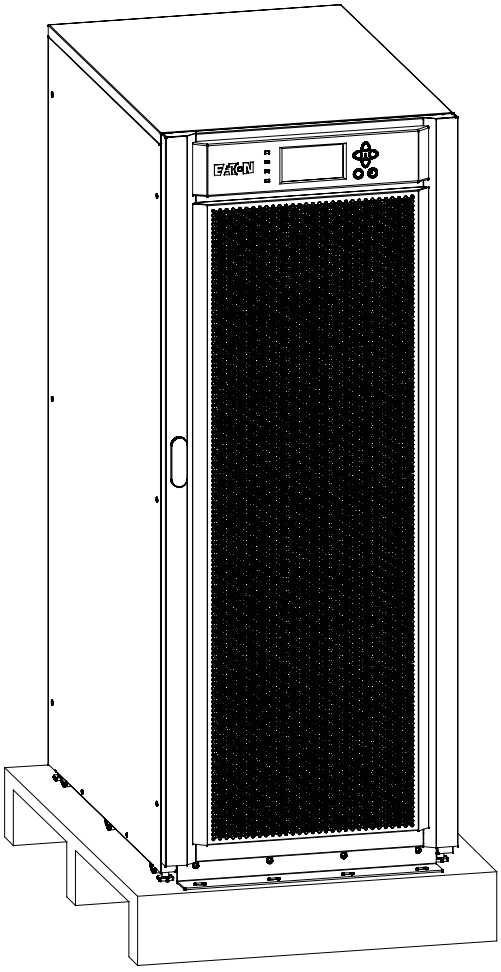

Figure 3-5. UPS Cabinet as Shipped on Pallet (wood container removed)

This page intentionally left blank.

Chapter 4 UPS System Installation

4.1 Preliminary Installation Information

WARNING

Installation should be performed only by qualified personnel.

Refer to the following while installing the UPS system:

- Chapter 3 for cabinet dimensions, equipment weight, wiring and terminal data, and installation notes.
- Do not tilt the cabinets more than ±10° during installation.
- If perforated floor tiles are required for ventilation, place them in front of the UPS.

4.2 Unloading the UPS Cabinet from the Pallet

The UPS Cabinet is bolted to a wooden pallet supported by wood skids. To remove the pallet:

WARNING

The UPS cabinet is heavy (see Table 3-1). If unpacking and unloading instructions are not closely followed, the cabinet may tip and cause serious injury.

CAUTION

- Do not tilt cabinet more than 10° from vertical.
- Lift the cabinets only with a forklift or damage may occur.

NOTE For the following steps, verify that the forklift or pallet jack is rated to handle the weight of the cabinet (see Table 3-1 for cabinet weight)

1. If not already accomplished, use a forklift or pallet jack to move the UPS cabinet to the installation area, or as close as possible, before unloading from the pallet. Insert the forklift or pallet jack forks between the supports on the bottom of the pallet (see Figure 3-3 for the UPS cabinet center of gravity measurements).
2. Remove four bolts securing the front shipping bracket to the cabinet and four bolts securing the bracket to the pallet (see Figure 4-1). Remove the front shipping bracket. If installing the cabinet permanently, retain the shipping bracket and securing hardware for later use.
3. Attach the ramp to the front of the pallet (see Figure 4-2):
   a. Locate the ramp (top panel from wood container), ramp extension, and ramp brackets with M10 bolts.
   b. Place the ramp against the front of the pallet.
   c. Secure the ramp to pallet using the supplied ramp brackets and M10 bolts. Insert the lip on the brackets into the slots at the top of the ramp. Use the existing holes in the pallet to secure the ramp brackets.
   d. Attach the ramp extension to the front of the ramp by inserting the tabs on the extension into the slots at the bottom of the ramp.
4. If the leveling feet are not fully retracted, turn the leveling feet until they are retracted.

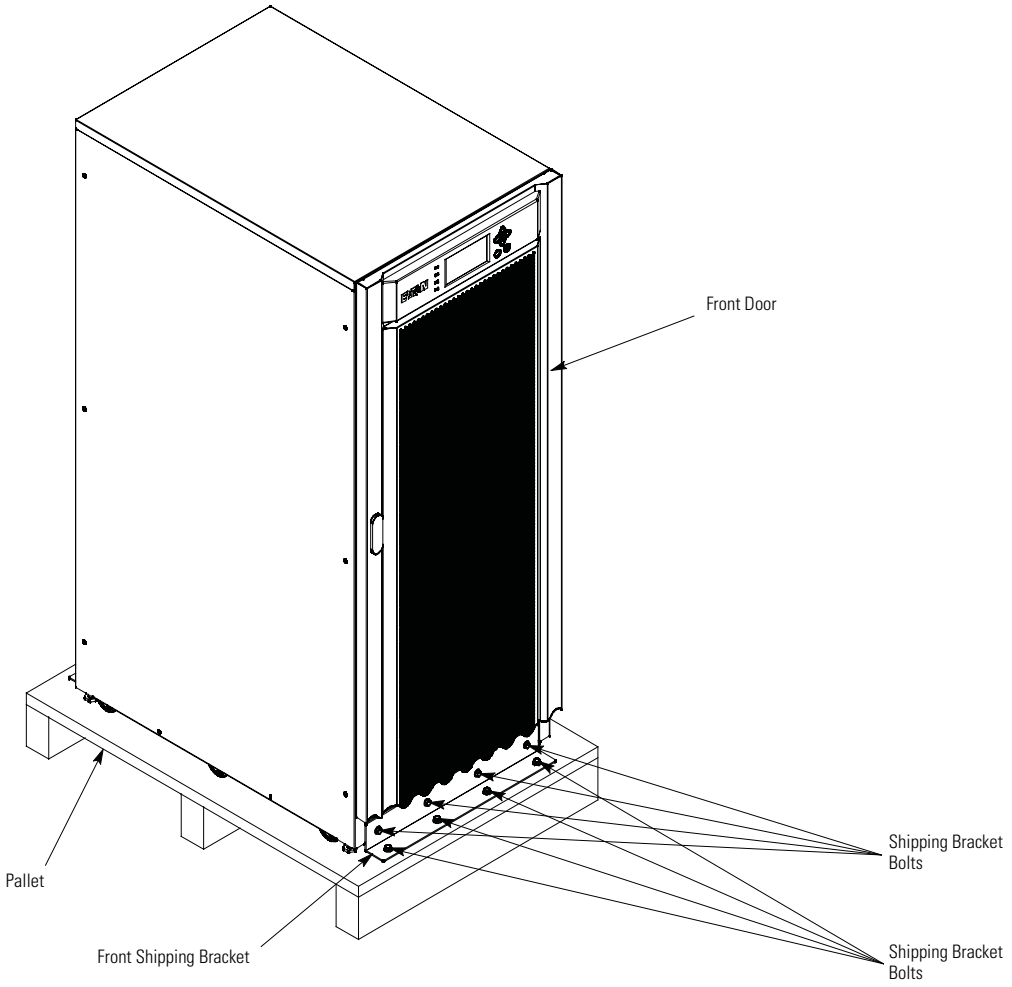

Figure 4-1. Removing the Front Shipping Bracket

5. Remove four bolts securing the rear shipping bracket to the cabinet and four bolts securing the bracket to the pallet (see Figure 4-3). Remove the rear shipping bracket. If installing the cabinet permanently, retain the shipping bracket and securing hardware for later use.

⚠ WARNING

Do not stand directly in front of the pallet while unloading the cabinet. If unloading instructions are not closely followed, the cabinet may cause serious injury.

6. Slowly roll the cabinet toward the front of the pallet. Continue rolling the cabinet down the ramp until the cabinet is clear of the ramp (see Figure 4-4).
7. Roll the cabinet to the final installation location.
8. If installing the cabinet permanently, retain the shipping brackets and hardware; otherwise, recycle the pallet, ramp, and shipping brackets in a responsible manner.
9. Secure the UPS cabinet in position by lowering the leveling feet until the cabinet is not resting on the casters and the cabinet is level.

10. If permanently mounting the system, proceed to Step 11; otherwise, continue to Step 13.
11. Using the retained hardware, reinstall the shipping brackets removed in Step 2 and Step 5 to the front and rear of the UPS cabinet with the angle facing outward (see Figure 4-1 and Figure 4-3).
12. Secure the cabinet to the floor with customer-supplied hardware.
13. Proceed to paragraph 4.3.

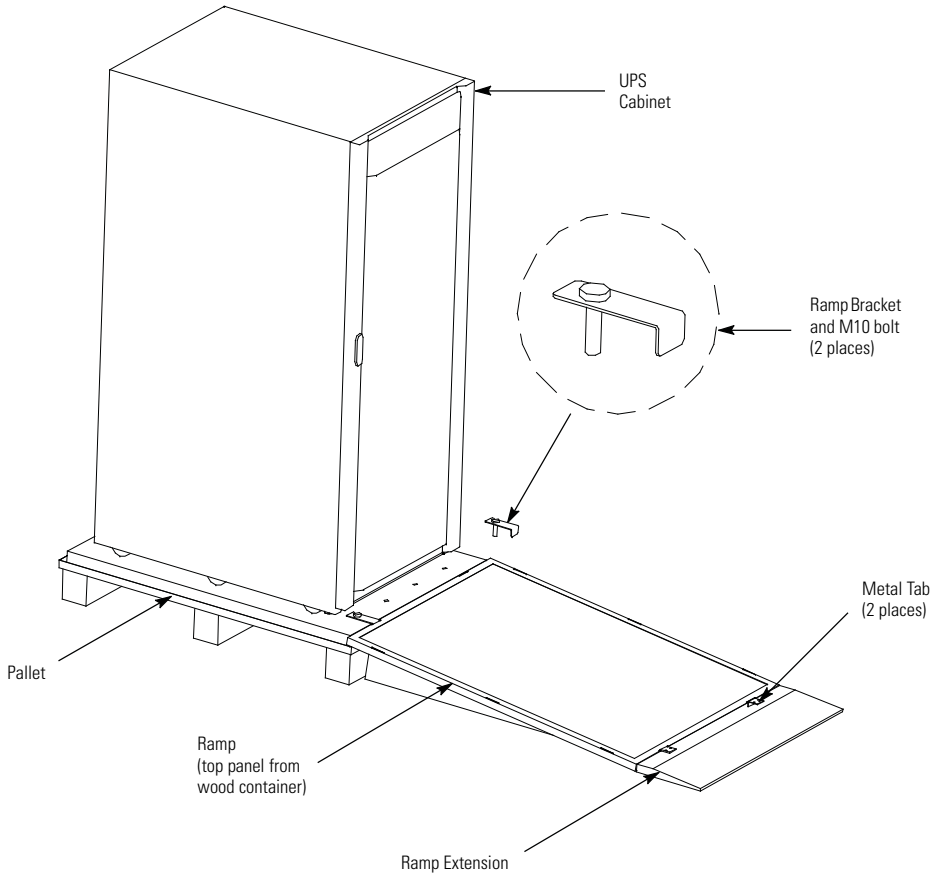

Figure 4-2. Attaching the Ramp to the Pallet

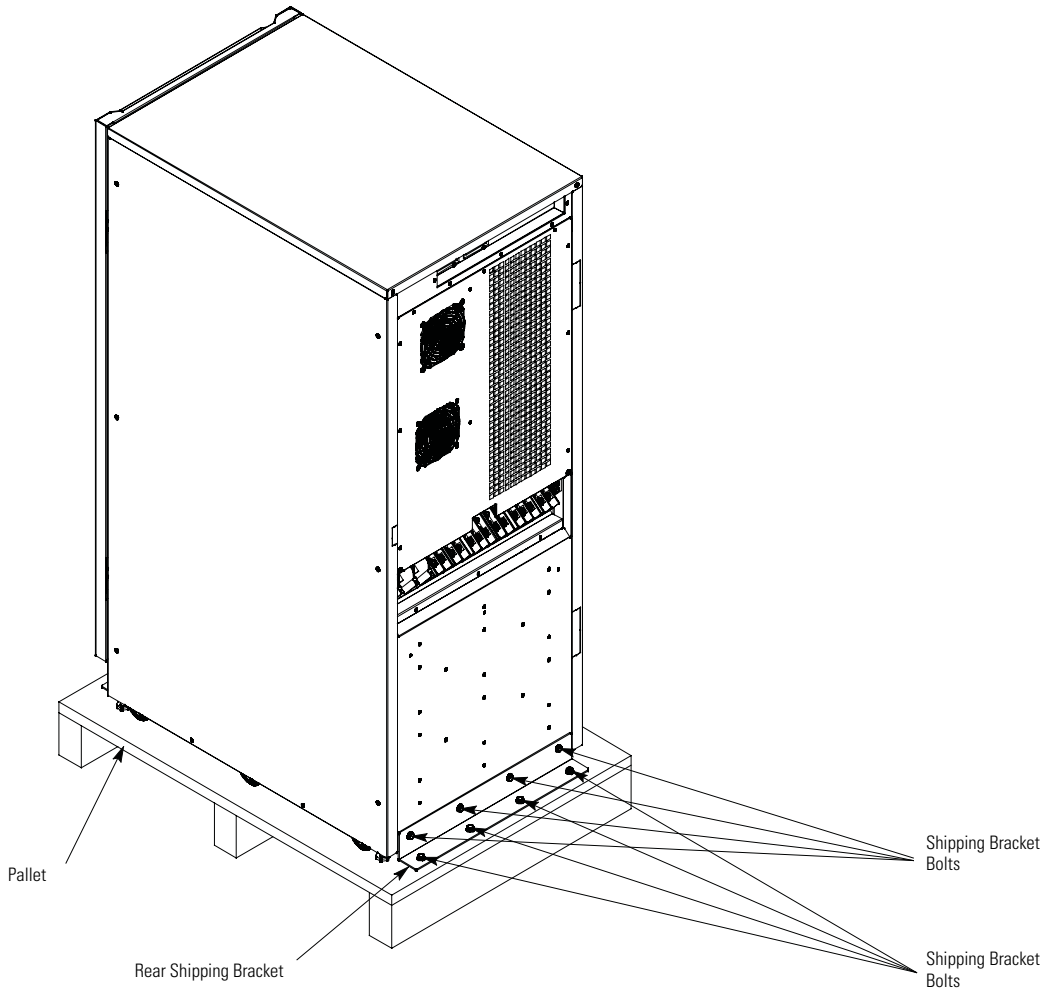

Figure 4-3. Removing the Rear Shipping Bracket

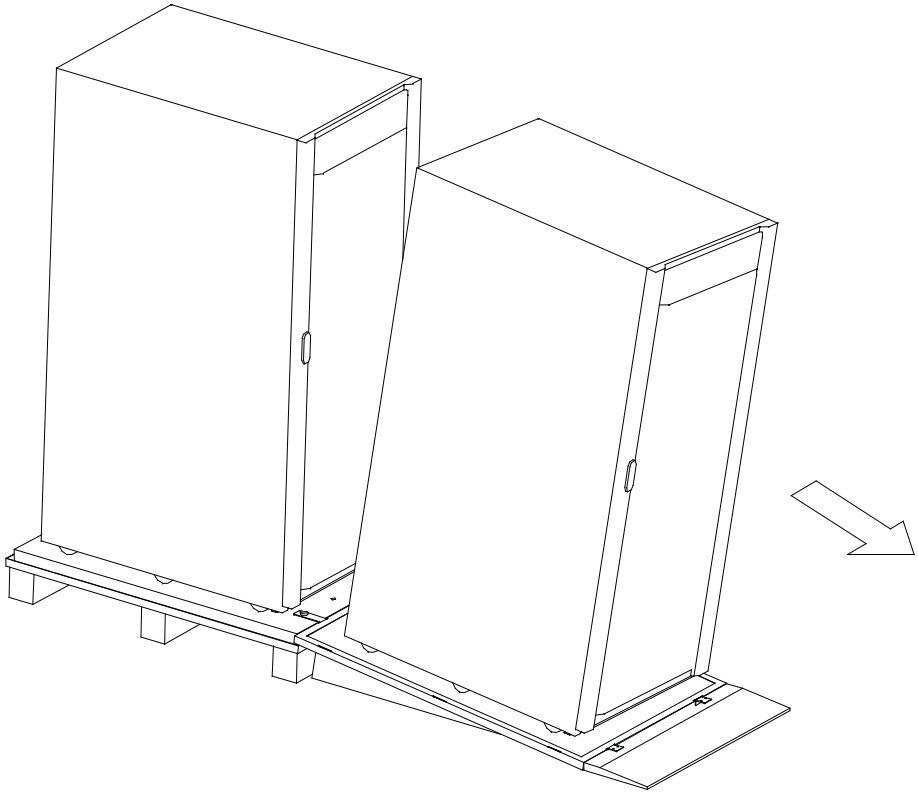

Figure 4-4. Rolling the Cabinet Down the Ramp

4.3 Installing Power Terminal Cover Base

NOTE Wiring can be installed between the UPS and accessory cabinets by using conduit or by routing wiring through the power terminal cover base wiring channels.

To install the Power Terminal Cover Base:

1. Locate the terminal cover base (see Figure 4-5) from the parts kit.
2. If installing wiring using conduit, proceed to Step 3; otherwise, proceed to Step 4.
3. Punch or drill holes in the bottom of the power terminal cover base (see 4-5 and 4-6) for the AC input, output, bypass, DC input, REPO conduit as required.
4. Using the hardware provided, install the terminal cover base to the back panel of the UPS using the existing cabinet screw holes (see Figure 4-6).
5. Proceed to paragraph 4.4.

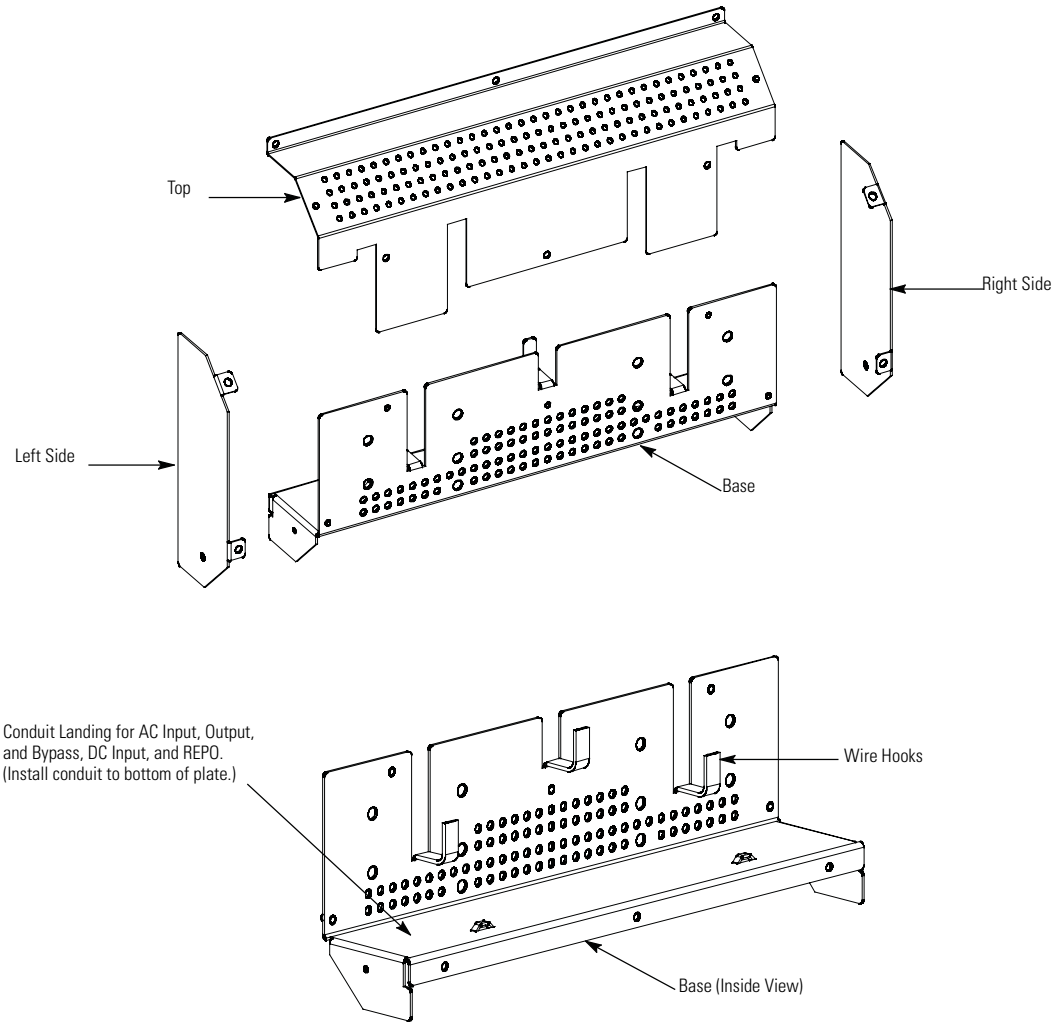

Figure 4-5. UPS Power Terminal Cover Parts

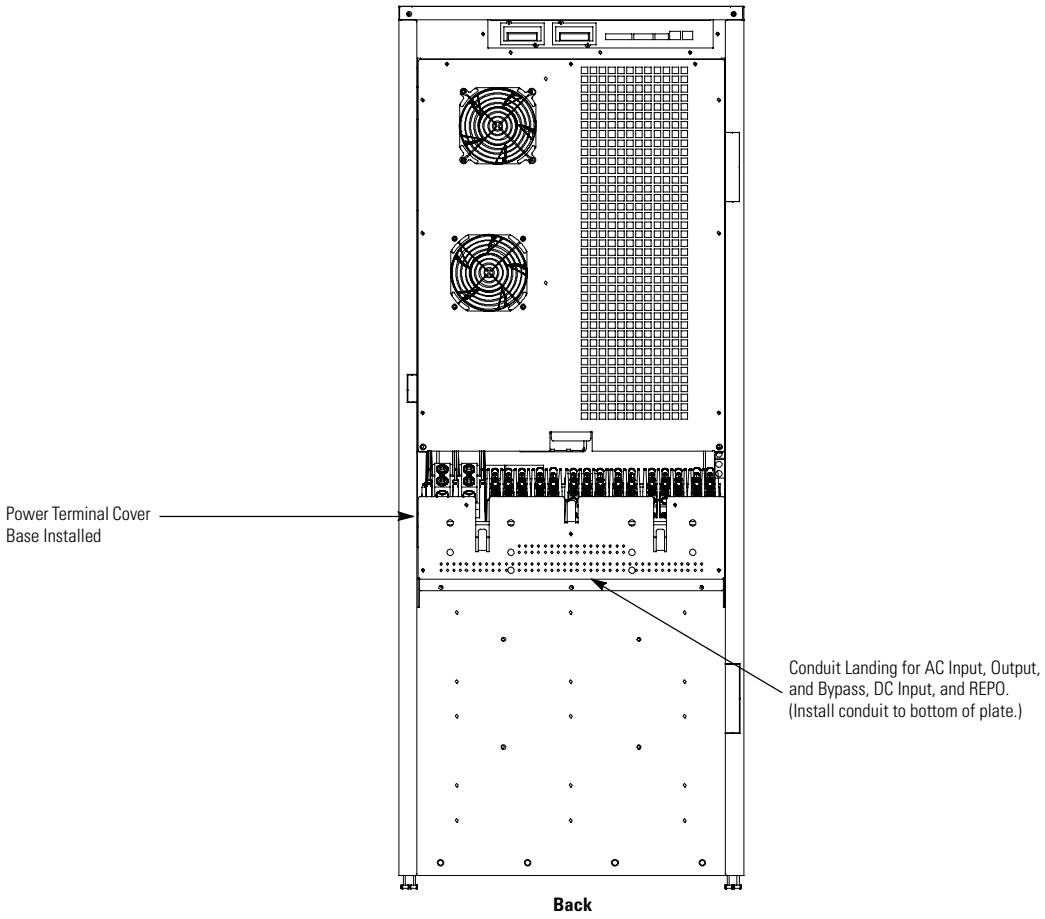

Figure 4-6. UPS Power Terminal Cover Base Installation and Conduit Landing Wire Entry Locations

4.4 External Battery Cabinet Installation

If installing External Battery Cabinets (EBCs), refer to the *Eaton 9E External Battery Cabinet Installation Manual* listed in paragraph 1.8 for installation instructions.

After the EBC is installed, proceed to paragraph 4.5 if installing an Integrated Transformer Cabinet (ITC), to paragraph 4.6 if installing an Integrated Accessory Cabinet-Bypass (IAC-B), to paragraph 4.7 if installing a Integrated Accessory Cabinet-Tie (IAC-T), to paragraph 4.8 if installing a Integrated Accessory Cabinet-Tie and Bypass (IAC-TB), or to paragraph 4.9 if installing an Integrated Accessory Cabinet-Distribution (IAC-D); otherwise, proceed to paragraph 4.10 to complete the wiring of the UPS.

4.5 Integrated Transformer Cabinet Installation

If installing an ITC, refer to the *Eaton 9E Integrated Transformer Cabinet Installation Manual* listed in paragraph 1.8 for installation instructions.

After the ITC is installed, proceed to paragraph 4.6 if installing an IAC-B, or to paragraph 4.9 if installing an IAC-D; otherwise, proceed to paragraph 4.10 to complete the wiring of the UPS.

4.6 Integrated Accessory Cabinet-Bypass Installation

If installing an IAC-B, refer to the *Eaton 9E Integrated Accessory Cabinet-Tie and Bypass Installation and Operation Manual* listed in paragraph 1.8 for installation instructions.

After the IAC-B is installed, proceed to paragraph 4.9 if installing Integrated Accessory Cabinet-Distribution; otherwise, proceed to paragraph 4.10 to complete the wiring of the UPS.

4.7 Integrated Accessory Cabinet-Tie

If installing an IAC-T, refer to the *Eaton 9E Integrated Accessory Cabinet-Tie and Bypass Installation and Operation Manual* listed in paragraph 1.8 for installation instructions.

After the IAC-T is installed, proceed to paragraph 4.9 if installing Integrated Accessory Cabinet-Distribution; otherwise, proceed to paragraph 4.10 to complete the wiring of the UPS.

4.8 Integrated Accessory Cabinet-Tie and Bypass

If installing an IAC-TB, refer to the *Eaton 9E Integrated Accessory Cabinet-Tie and Bypass Installation and Operation Manual* listed in paragraph 1.8 for installation instructions.

After the IAC-TB is installed, proceed to paragraph 4.9 if installing Integrated Accessory Cabinet-Distribution; otherwise, proceed to paragraph 4.10 to complete the wiring of the UPS.

4.9 Integrated Accessory Cabinet-Distribution

If installing IAC-D, refer to the *Eaton 9E Integrated Accessory Cabinet-Distribution Installation and Operation Manual* listed in paragraph 1.8 for installation instructions.

After the IAC-D is installed, proceed to paragraph 4.10 to complete the wiring of the UPS.

4.10 External Power Wiring Installation

NOTE Without accessory cabinets, conduit and wiring enter from the bottom of the UPS conduit landing plate. With accessory cabinets, wiring can be installed between the UPS and accessory cabinets by using conduit or by routing wiring through the power terminal cover base wiring channels.

To install wiring:

1. Install conduit for UPS input and output wiring.
2. Route the wiring to the UPS terminal blocks on the back of the UPS. See Figure 4-6 for wiring access information and Figure 4-7 for terminal locations.
3. Connect phase A, B, C, and Neutral rectifier input power wiring from the utility source to the rectifier input and neutral terminals. See paragraph 3.2.2 for wiring and termination requirements.

   For a detailed view of the UPS terminal block, see Figure 4-8.
4. If wiring a dual-feed system, proceed to Step 5; otherwise, proceed to Step 6.
5. Connect phase A, B, and C, and Neutral bypass input power wiring from the utility source to the bypass input terminals and neutral terminals. See paragraph 3.2.2 for wiring and termination requirements.

   For a detailed view of the UPS terminal block, see Figure 4-8.
6. Connect phase A, B, and C, and Neutral (if required) power wiring from output terminals and neutral terminals to the critical load. See paragraph 3.2.2 for wiring and termination requirements.

   For a detailed view of the UPS terminal block, see Figure 4-8.

WARNING

As a result of the connected loads high leakage current is possible. Connection to earth ground is required for safety and proper product operation. Do not check UPS operation by any action that includes removal of the earth (ground) connection with loads attached.

7. Ground the UPS according to local and/or national electrical wiring codes by routing and connecting the ground wire to the input ground lug. See Figure 4-7 for UPS terminal locations.

   For a detailed view of the UPS ground terminals, see Figure 4-8.

8. If wiring interface connections, proceed to paragraph 4.11; otherwise, proceed to Step 9.
9. Install the power terminal cover top using the provided hardware (see Figure 4-9).
10. Install the power terminal cover right and left sides using the provided hardware.
11. Proceed to paragraph 4.13.

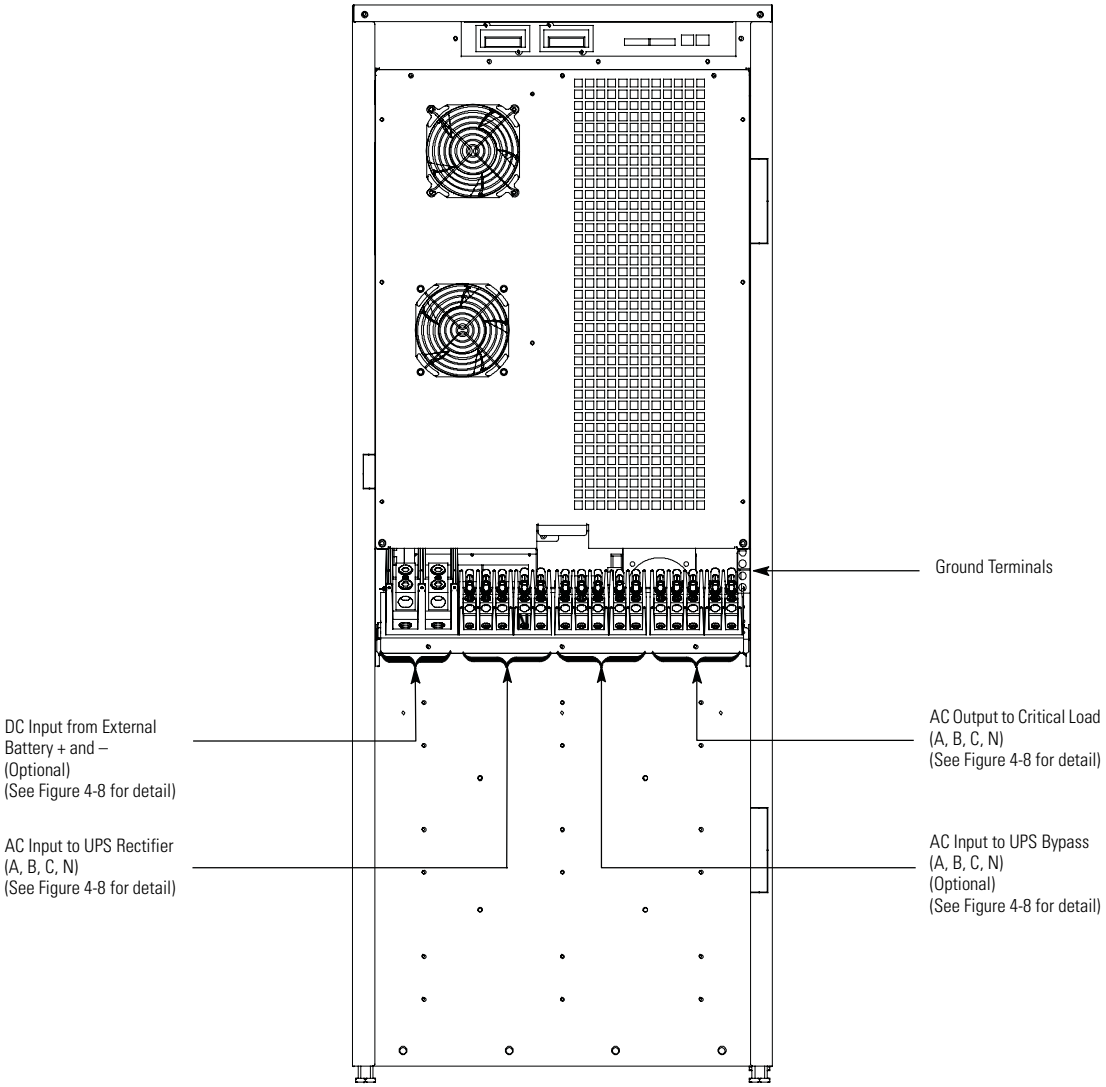

Figure 4-7. Power Terminal Locations

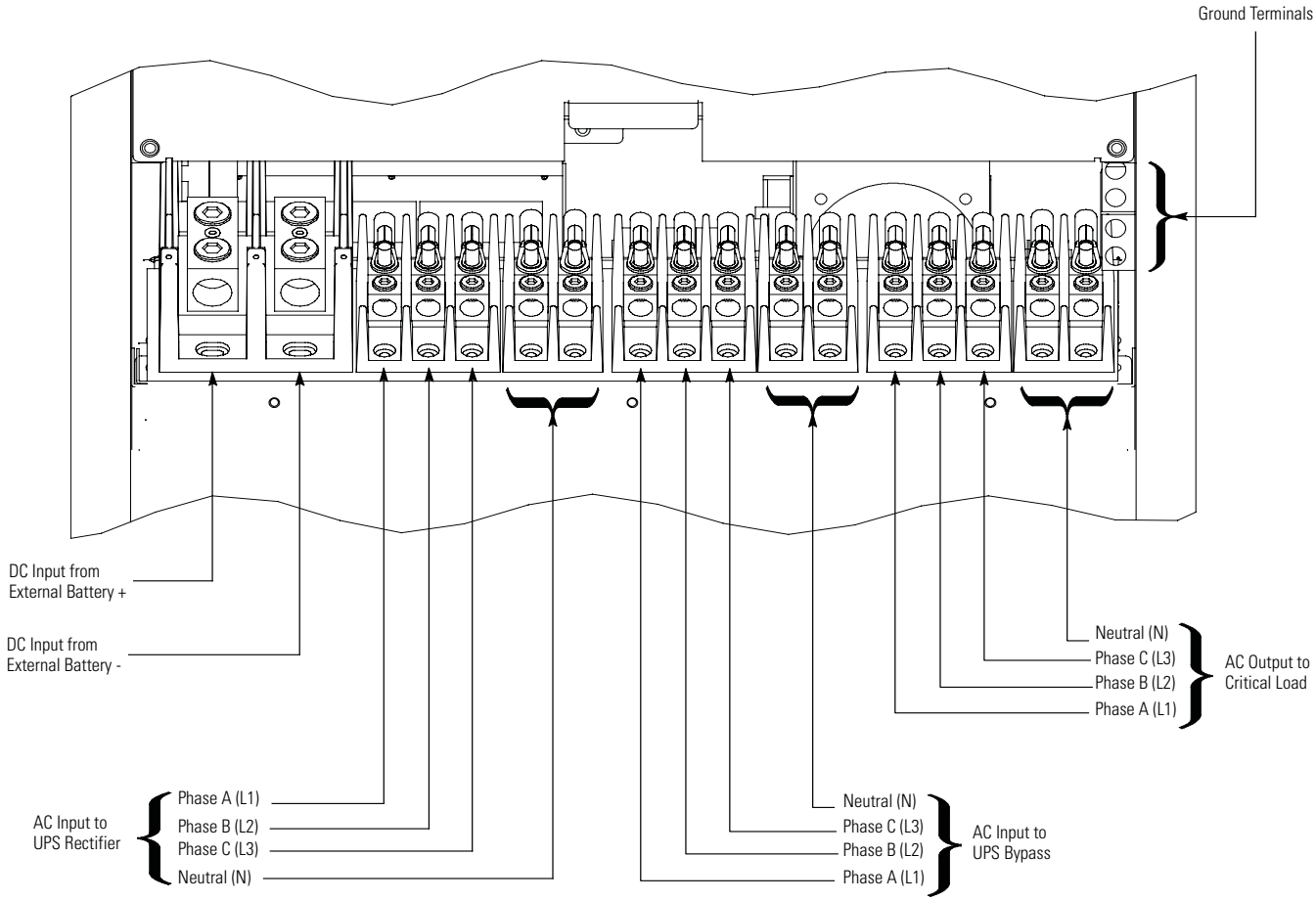

Figure 4-8. Power Terminal Detail

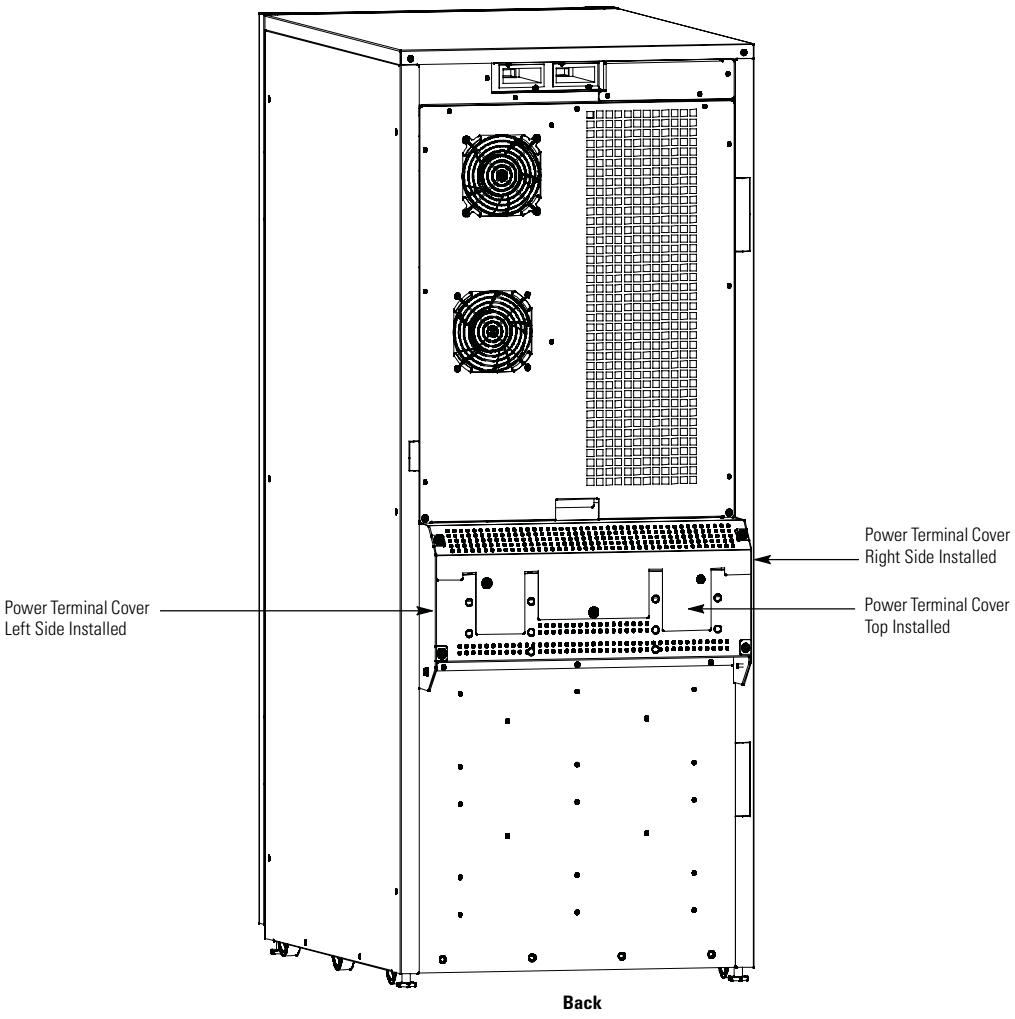

Figure 4-9. Power Terminal Cover Top Installation

4.11 Installing Interface Wiring and Connections

4.11.1 Installing Building Alarm Wiring and Connections

To install wiring:

1. Verify the UPS system is turned off and all power sources are removed. See Chapter 6, "UPS Operating Instructions," for shutdown instructions.
2. To locate the appropriate terminals and review the wiring and termination requirements, see paragraph 3.2.3, Table 4-1, Figure 4-10, Figure 4-11, and Figure 4-12.

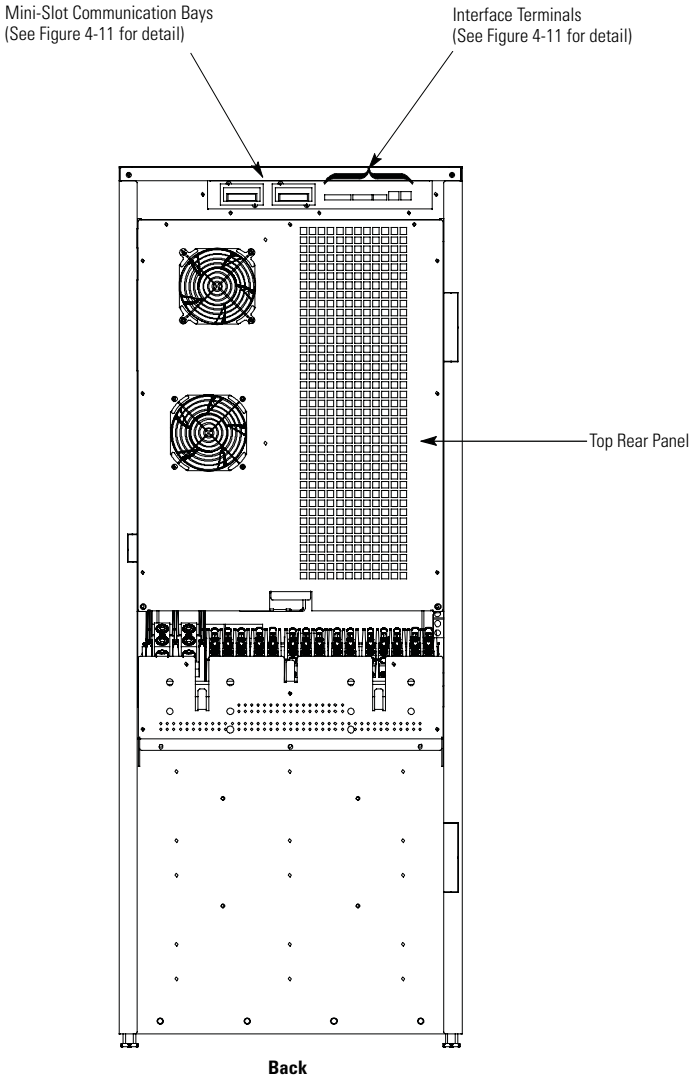

Figure 4-10. Interface Terminal Locations

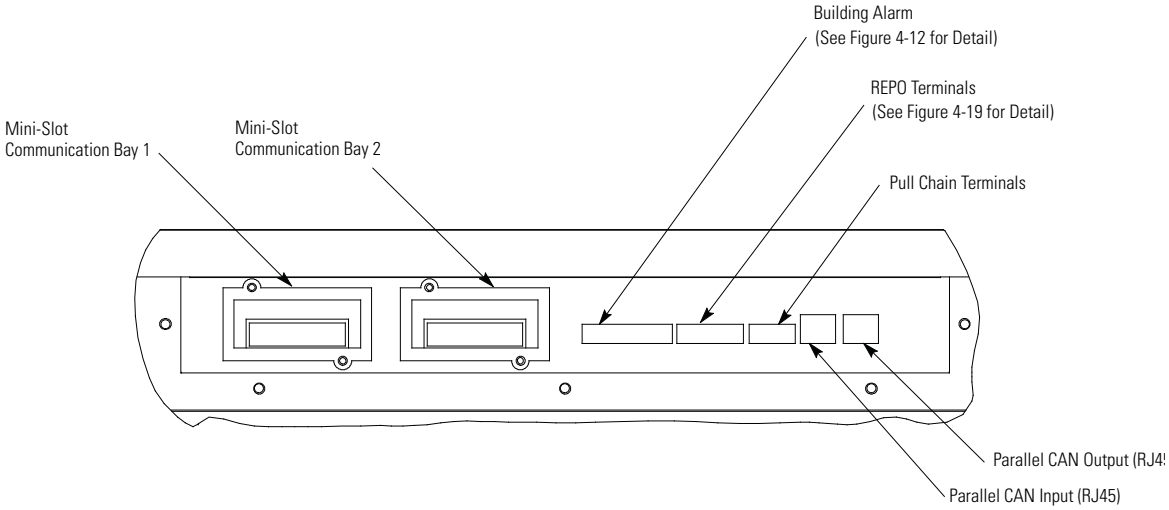

Figure 4-11. Interface Terminal Detail (Terminal Cover Removed)

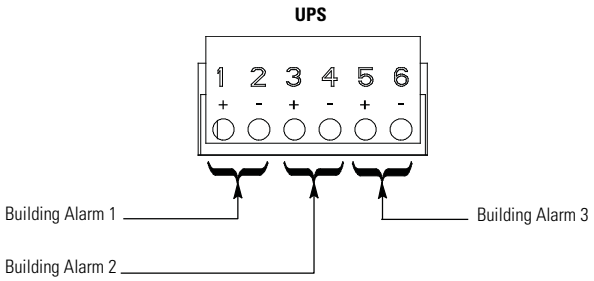

Figure 4-12. Building Alarm Terminal Block Connector Assignments

Table 4-1. Building Alarm Connections

Building Alarm Terminal	Name	Description
1	Building Alarm 1 +	Input: Programmable UPS alarm, activated by a remote dry contact closure.
2	Building Alarm 1 –	
3	Building Alarm 2 +	Input: Programmable UPS alarm, activated by a remote dry contact closure.
4	Building Alarm 2 –	
5	Building Alarm 3 +	Input: Programmable UPS alarm, activated by a remote dry contact closure.
6	Building Alarm 3 –	

3. Route the wiring to the terminal block:

   a. If not already removed, remove the power terminal cover right and left sides (see Figure 4-9). Retain the cover top and hardware for later use.

   b. If not already removed, remove the power terminal cover top. Retain the cover top and hardware for later use.

NOTE The lower fan is attached to the top rear panel.

c. Remove the screws securing the top rear panel (see Figure 4-10). Supporting the panel, tilt the panel away from the cabinet and disconnect the fan connector from the wiring harness.

d. Remove the panel. Retain the panel and hardware for later use.

e. Remove the interface terminal cover (see Figure 4-13). Retain the cover and hardware for later use.

NOTE Conduit and wiring enter from the bottom of the conduit landing plate.

f. Punch or drill a hole in the power terminal cover base (see Figure 4-5, Figure 4-6, and Figure 4-14) for the interface wiring conduit.

g. Route the wiring along the interface wiring channel (see Figure 4-14) to the wiring access (see Figure 4-15). Secure the wiring to the four mounting clips provided using Zip ties.

h. Supporting the top rear panel at the back of the cabinet, reconnect the fan connector to the wiring harness.

i. Reinstall the top rear panel by tilting into position and securing the panel using the retained hardware.

j. Reinstall the power terminal cover top using the retained hardware.

k. Install the power terminal cover right and left sides using the provided hardware.

4. Connect the building alarm interface wiring as shown in Table 4-1 and Figure 4-12.
5. Reinstall the interface terminal cover using the retained hardware.
6. If wiring parallel connections, proceed to paragraph 4.11.2; if wiring Mini-Slot connections, proceed to paragraph 4.11.3; otherwise, proceed to Step 7.
7. Install the power terminal cover top using the provided hardware (see Figure 4-9).
8. Install the power terminal cover right and left sides using the provided hardware.
9. Proceed to paragraph 4.13.

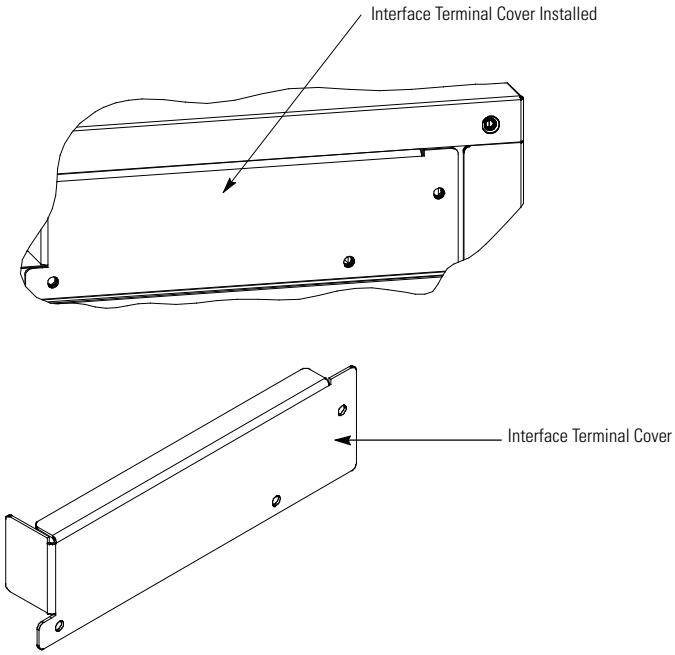

Figure 4-13. Interface Terminal Cover

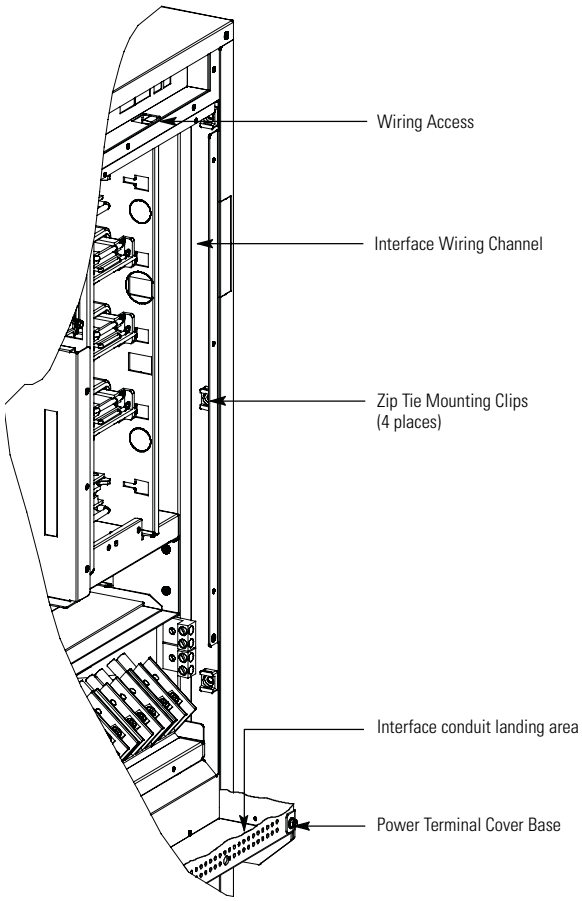

Figure 4-14. Interface Conduit Landing and Wiring Channel

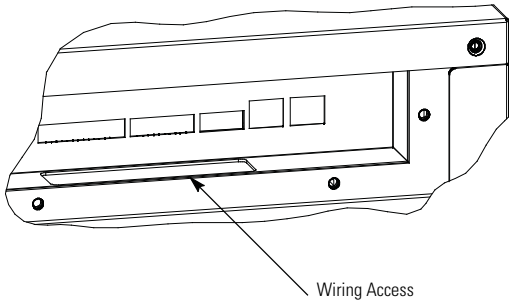

Figure 4-15. Interface Wiring Access

4.11.2 Installing Parallel Pull Chain and CAN Control Wiring and Connections

To install wiring:

1. Verify the UPS system is turned off and all power sources are removed. See Chapter 6, "UPS Operating Instructions," for shutdown instructions.
2. To locate the appropriate terminals and review the wiring and termination requirements, see paragraph 3.2.3, Table 4-2, Figure 4-10, Figure 4-11, and Figure 4-16.

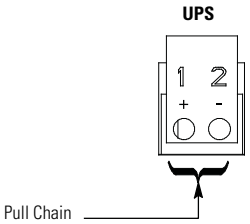

Figure 4-16. Pull Chain Terminal Block Connector Assignments

Table 4-2. Pull Chain Connections

Pull Chain Terminal	Name	Description
1	Pull Chain +	Output: Backup control for parallel operation.
2	Pull Chain –	

3. Route the wiring to the terminal block:
   a. If not already removed, remove the power terminal cover right and left sides (see Figure 4-9). Retain the cover top and hardware for later use.
   b. If not already removed, remove the power terminal cover top. Retain the cover top and hardware for later use.

NOTE The lower fan is attached to the top rear panel.

   c. Remove the screws securing the top rear panel (see Figure 4-10). Supporting the panel, tilt the panel away from the cabinet and disconnect the fan connector from the wiring harness.
   d. Remove the panel. Retain the panel and hardware for later use.
   e. Remove the interface terminal cover (see Figure 4-13). Retain the cover and hardware for later use.

NOTE Conduit and wiring enter from the bottom of the conduit landing plate.

   f. Punch or drill a hole in the power terminal cover base (see Figure 4-5, Figure 4-6, and Figure 4-14) for the interface wiring conduit.
   g. Route the wiring along the interface wiring channel (see Figure 4-14) to the wiring access (see Figure 4-15). Secure the wiring to the four mounting clips provided using Zip ties.
   h. Supporting the top rear panel at the back of the cabinet, reconnect the fan connector to the wiring harness.
   i. Reinstall the top rear panel by tilting into position and securing the panel using the retained hardware.
   j. Reinstall the power terminal cover top using the retained hardware.

k. Install the power terminal cover right and left sides using the provided hardware.

4. Route and install RJ-45 Controller Area Network (CAN) cables between the UPS cabinets. See Figure Figure 4-11 and Figure 4-17 for wiring information.
5. Route and install pull chain wiring between the UPS cabinets and cabinet MOBs. See Figure 4-11, Figure 4-16, and Figure 4-17 for wiring information.
6. Reinstall the interface terminal cover using the retained hardware.
7. If wiring Mini-Slot connections, proceed to paragraph 4.11.3; otherwise, proceed to Step 8.
8. Install the power terminal cover top using the provided hardware (see Figure 4-9).
9. Install the power terminal cover right and left sides using the provided hardware.
10. Proceed to paragraph 4.13.

4.11.3 Installing Mini-Slot Interface Wiring and Connections

NOTE LAN drop for use with Mini-Slot cards must be provided by the customer.

For installation and setup of an Mini-Slot card, contact an Eaton service representative (see paragraph 1.8)

To install wiring:

1. If not already installed, install the LAN drop.
2. Route and install the LAN and other cables to the appropriate Mini-Slot cards. See Figure 4-10 and Figure 4-11 for Mini-Slot communication bay locations.
3. Refer to the manual supplied with the Mini-Slot card for operator instructions.
4. Install the power terminal cover top using the provided hardware (see Figure 4-9).
5. Install the power terminal cover right and left sides using the provided hardware.
6. Proceed to paragraph 4.13.

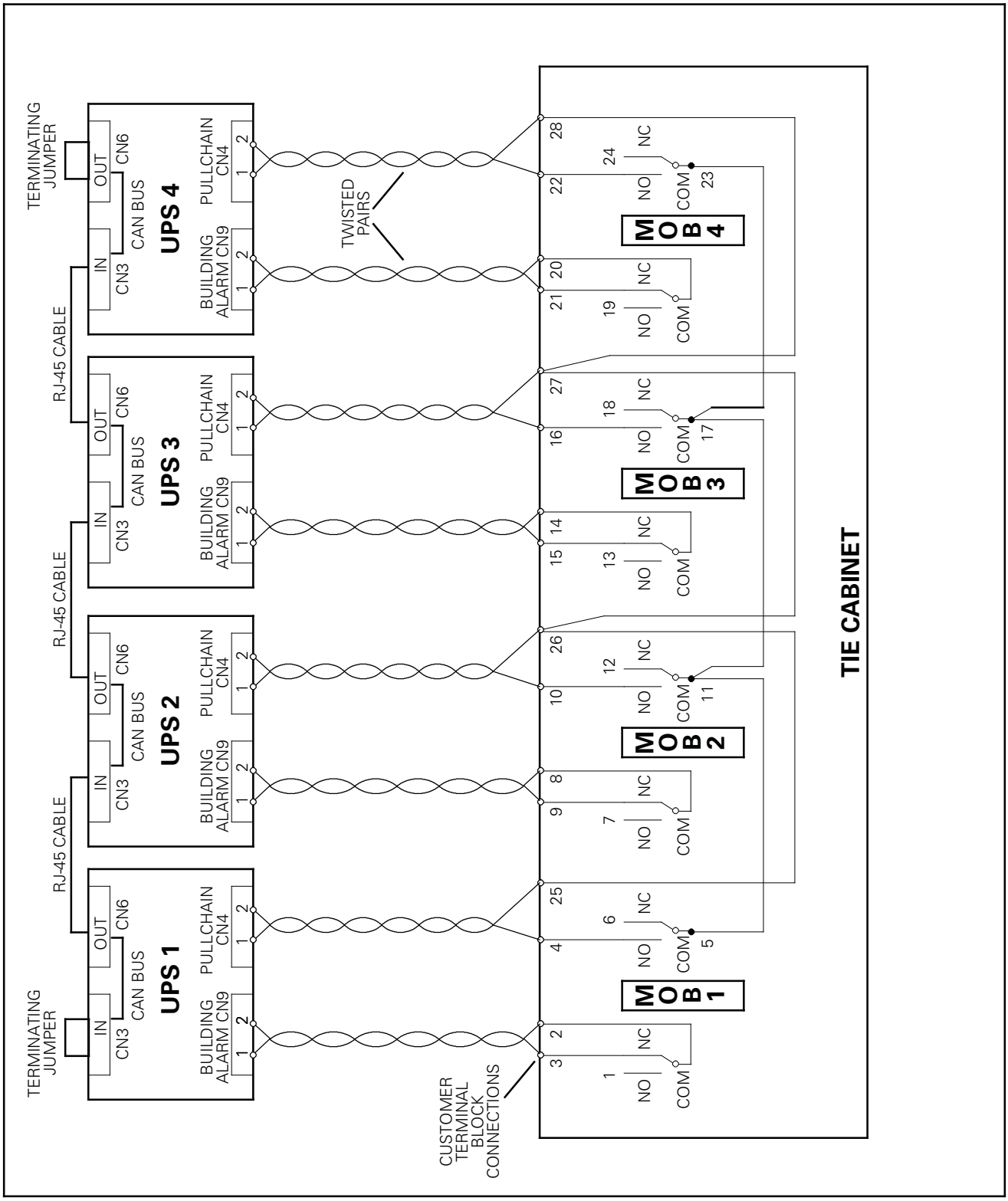

Figure 4-17. Parallel UPS Control Wiring

4.12 Installing a REPO Switch

A latching-type Remote Emergency Power-off (REPO) switch can be used in an emergency to shut down the UPS and remove power to the critical load from a location away from where the UPS is installed. Figure 4-18 shows a REPO switch.

NOTE 1 Before installing a REPO switch, verify that the UPS was installed according to the instructions in paragraphs 4.2 through 4.11.

NOTE 2 When installing the REPO switch, you must install conduit between the device and the UPS cabinet for wiring the switch.

NOTE 3 The REPO switch must be a normally-open or normally-closed latching-type switch not tied into any other circuits.

NOTE 4 This procedure is intended for installing the Eaton-supplied REPO switch. If installing another manufacturer's switch, use this procedure, and Figure 4-20 and Figure 4-21 as a guide.

NOTE 5 The REPO switch wiring must be in accordance with NEC Article 725 Class 2 requirements.

To Install a REPO switch:

1. Verify the UPS system is turned off and all power sources are removed. See Chapter 6, "UPS Operating Instructions," for shutdown instructions.
2. Securely mount the REPO switch. Recommended locations include operator's consoles or near exit doors. See Figure 3-4 for enclosure dimensions and wiring knockouts.
3. To locate the appropriate terminals and review the wiring and termination requirements, see paragraph 3.2.3, Table 4-3, Figure 4-10, Figure 4-11, and Figure 4-19.

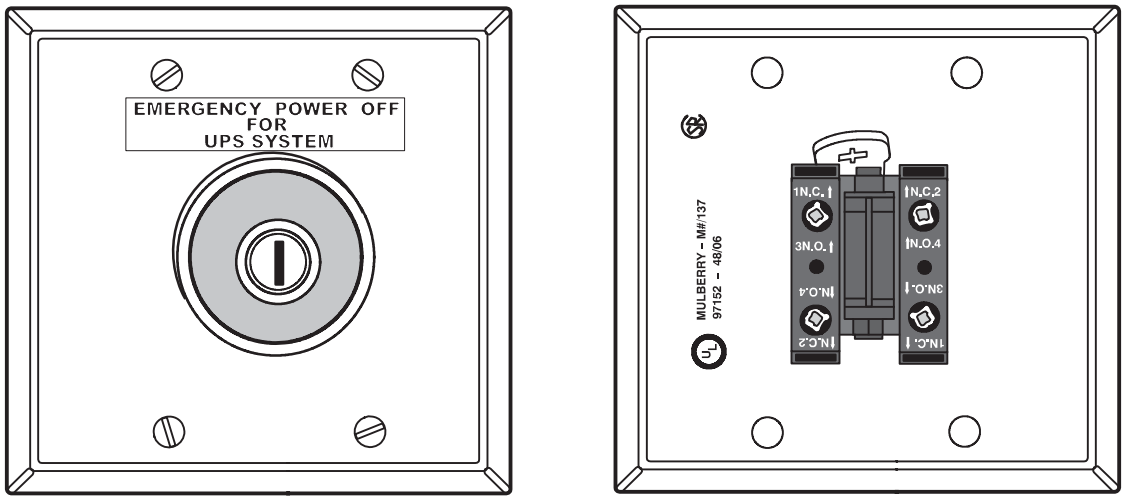

REPO Switch (Front View) Contact Block (Back View, Faceplate Removed)

Figure 4-18. REPO Switch

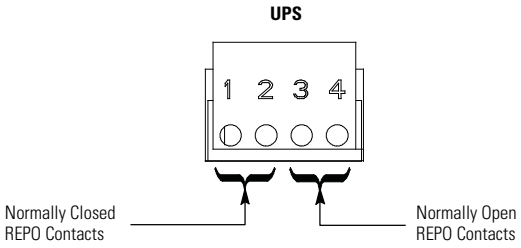

Figure 4-19. REPO Terminal Block Connector Assignments

Table 4-3. REPO Connections

REPO Terminal	Description
1	Input: normally-closed dry contact used to activate UPS EPO from a remote switch.
2	
3	Input: normally-open dry contact used to activate UPS EPO from a remote switch.
4	

4. Route the REPO wiring to the terminal block:
   a. If not already removed, remove the power terminal cover right and left sides (see Figure 4-9). Retain the cover top and hardware for later use.
   b. If not already removed, remove the power terminal cover top. Retain the cover top and hardware for later use.

NOTE The lower fan is attached to the top rear panel.

   c. Remove the screws securing the top rear panel (see Figure 4-10). Supporting the panel, tilt the panel away from the cabinet and disconnect the fan connector from the wiring harness.
   d. Remove the panel. Retain the panel and hardware for later use.
   e. Remove the interface terminal cover (see Figure 4-13). Retain the cover and hardware for later use.

NOTE Conduit and wiring enter from the bottom of the conduit landing plate.

   f. Punch or drill a hole in the power terminal cover base (see Figure 4-5, Figure 4-6, and Figure 4-14) for the REPO conduit.
   g. Route the wiring along the interface wiring channel (see Figure 4-14) to the wiring access (see Figure 4-15). Secure the wiring to the four mounting clips provided using Zip ties.
   h. Supporting the top rear panel at the back of the cabinet, reconnect the fan connector to the wiring harness.
   i. Reinstall the top rear panel by tilting into position and securing the panel using the retained hardware.
   j. Reinstall the power terminal cover top using the retained hardware.
   k. Install the power terminal cover right and left sides using the provided hardware.
5. Connect the wiring as shown in Table 4-4 and Figure 4-20 for a normally-open REPO or Table 4-5 and Figure 4-21 for a normally-closed REPO.

6. If using a normally-closed REPO switch, connect a jumper wire between pins 3 and 4 on the REPO terminal block.
7. If you are installing multiple REPO switches, wire additional switches in parallel with the first REPO.
8. If required, install wiring from the REPO switch to the trip circuitry of the upstream protective devices. A second contact block is provided on the REPO switch for this function (see Figure 4-18). The REPO switch wiring must be in accordance with NEC Article 725 Class 2 requirements.
9. Reinstall the interface terminal cover using the retained hardware.

Table 4-4. Normally-Open REPO Wire Terminations

From REPO Station(s) Switch Contact Block (Either Block)	To REPO Terminal Block on Back of UPS Cabinet	Wire Size	Tightening Torque
3 NO	3	Twisted Wires (2) 14–22 AWG (0.75 4.0 mm^2)	7 lb in (0.8 Nm)
4 NO	4		

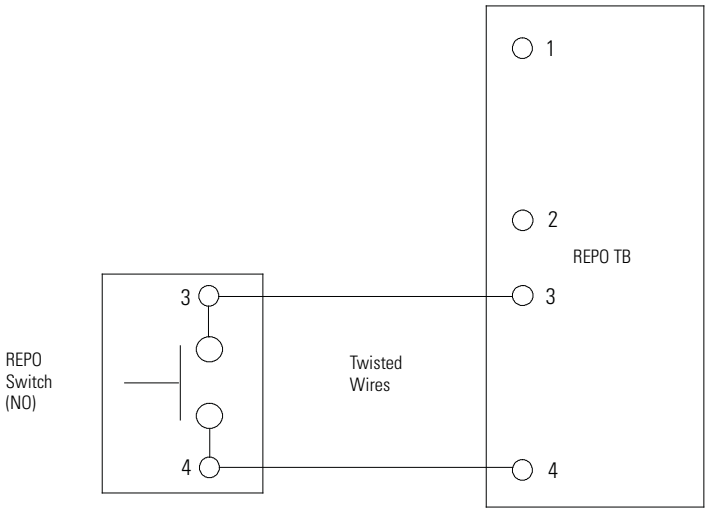

NOTE REPO switch rating is 24 Vdc, 1A minimum.

NOTE The REPO switch must be a latching-type switch not tied to any other circuits.

Figure 4-20. Normally-Open REPO Switch Wiring

Table 4-5. Normally-Closed REPO Wire Terminations

From REPO Station(s) Switch Contact Block (Either Block)	To REPO Terminal Block on Back of UPS Cabinet	Wire Size	Tightening Torque
3 NO	1	Twisted Wires (2) 14–22 AWG (0.75 4.0 mm^2)	7 lb in (0.8 Nm)
4 NO	2		

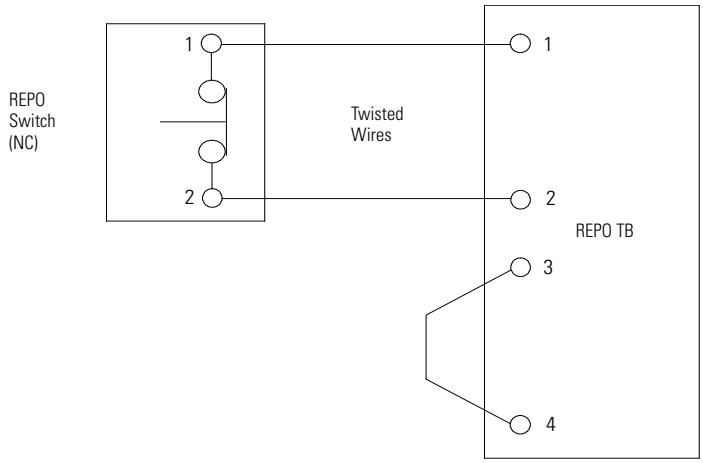

NOTE REPO switch rating is 24 Vdc, 1A minimum.

NOTE The REPO switch must be a latching-type switch not tied to any other circuits.

Figure 4-21. Normally-Closed REPO Switch Wiring

4.13 Connecting Internal Battery Strings

DANGER

This battery section contains its own energy source. Risk of electric shock. Do not touch uninsulated battery terminals. The internal wiring may carry LETHAL VOLTAGES.

WARNING

Internal battery strings should be connected by a qualified electrical contractor knowledgeable of battery systems, and required precautions.

CAUTION

Connect battery strings only after all wiring is complete.

The UPS is shipped with each battery tray string electrically disconnected. To connect the battery tray strings:

1. If not already open, open the front door (see Figure 4-1) by lifting the latch from the bottom and turning to the right (counterclockwise) and swing the door open.
2. Remove the screws securing the bottom internal safety shield panel (see Figure 4-22) and remove the panel to gain access to the battery section (see Figure 4-23). Retain the hardware for later use.
3. Connect the red and black connectors marked with the white flags (see Figure 4-24) for each set of batteries on the battery shelf.
4. Connect the black connectors (see Figure 4-24) for each set of batteries on the battery shelf.
5. Connect the red connectors (see Figure 4-24) for each set of batteries on the battery shelf.

NOTE The Eaton 9E–20 model has battery strings installed on two shelves. The Eaton 9E–30/20 and Eaton 9E–30/30 models have battery strings installed on three shelves.

6. Repeat Step 3 through Step 5 for each battery shelf (see Figure 4-23) to complete the battery string connections.
7. Reinstall the internal safety shield panel removed in Step 2.
8. Close the outside door and secure the latch.

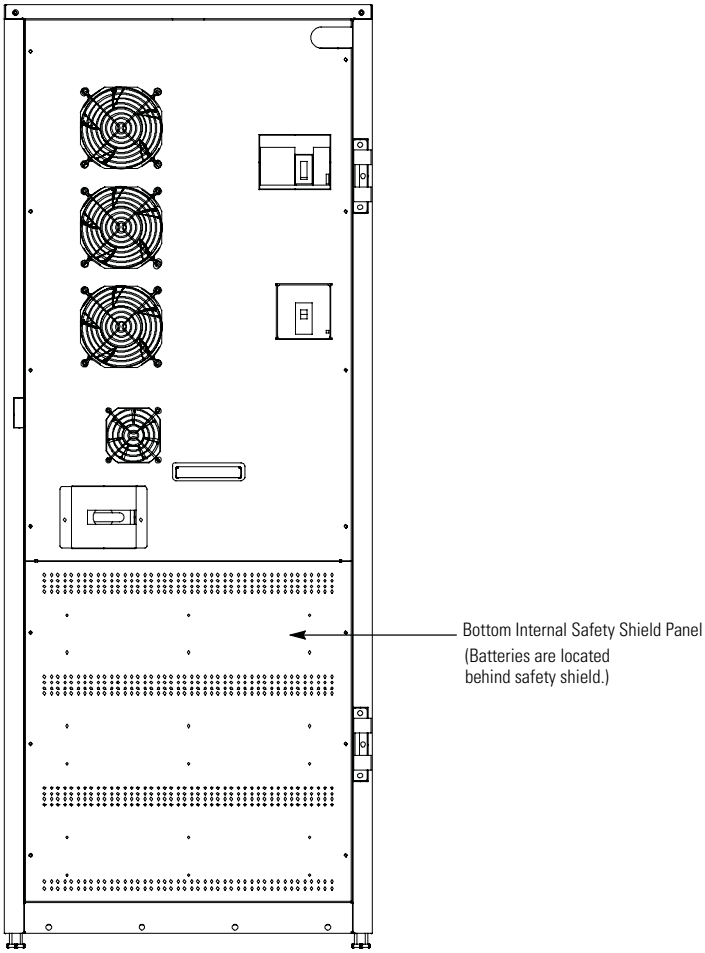

Figure 4-22. Battery Location

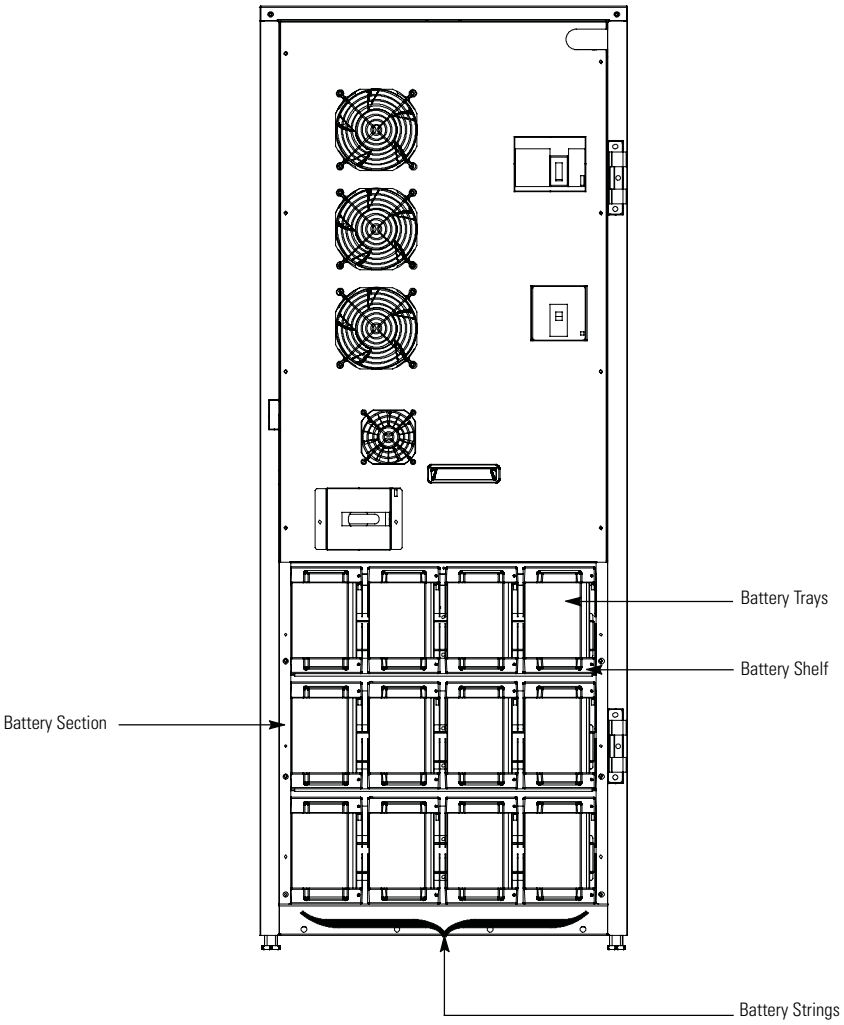

NOTE The Eaton 9E–20 model has battery strings installed on two shelves. The Eaton 9E–30/20 and Eaton 9E–30/30 models have battery strings installed on three shelves.

Figure 4-23. Battery Section

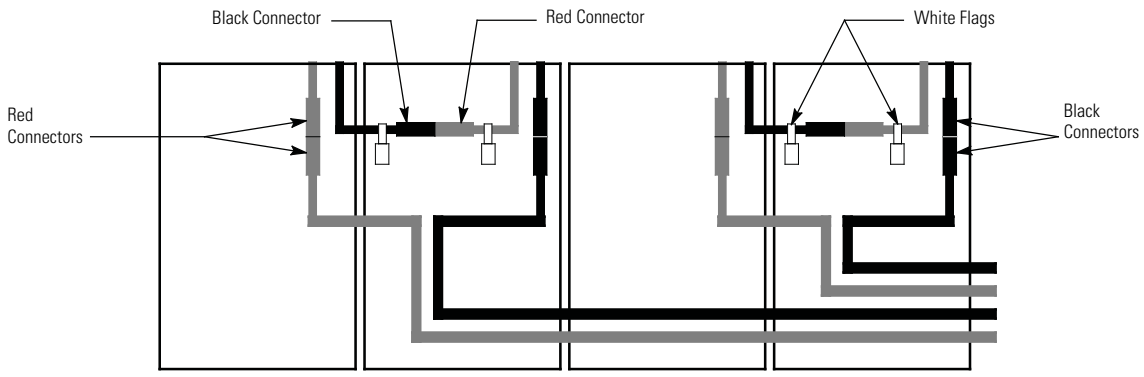

Figure 4-24. Battery String Connections

4.14 Initial Startup

Startup may be performed by the customer's battery qualified electrical contractor for single (not parallel) UPS installations without any accessory cabinets such as an External Battery Cabinet.

Startup and operational checks for parallel systems or installations with accessory cabinets must be performed by an authorized Eaton Customer Service Engineer, or the warranty terms specified on page W-1 become void. This service is offered as part of the sales contract for the UPS. Contact an Eaton service representative in advance (usually a two-week notice is required) to reserve a preferred startup date.

4.15 Completing the Installation Checklist

The final step in installing the UPS system is completing the following Installation Checklist. This checklist ensures that you have completely installed all hardware, cables, and other equipment. Complete all items listed on the checklist to ensure a smooth installation. Make a copy of the Installation Checklist before filling it out, and retain the original.

After the installation is complete, an Eaton Customer Service Engineer must verify the operation of the UPS system and commission it to support the critical load. The service representative cannot perform any installation tasks other than verifying software and operating setup parameters. Service personnel may request a copy of the completed Installation Checklist to verify all applicable equipment installations have been completed.

NOTE The Installation Checklist MUST be completed prior to starting the UPS system for the first time.

Installation Checklist

- ❑ All packing materials and restraints have been removed from each cabinet.
- ❑ The UPS cabinet is placed in its installed location
- ❑ All conduits and cables are properly routed to the UPS and any ancillary cabinets.
- ❑ All power cables are properly sized and terminated.
- ❑ Neutral conductors are installed.
- ❑ A ground conductor is properly installed.
- ❑ Building alarms are wired appropriately. (Optional)
- ❑ LAN drops are installed. (Optional)
- ❑ LAN connections have been completed. (Optional)
- ❑ The REPO device is mounted in its installed location and its wiring is terminated inside the UPS cabinet. (Optional)
- ❑ A jumper wire is connected between pins 3 and 4 on the REPO terminal block if using a normally-closed REPO switch. (Optional)
- ❑ Internal battery strings are connected after all other wiring is complete.
- ❑ All terminal cover plates are installed.
- ❑ Accessories are mounted in installed locations and wiring is terminated inside the UPS cabinet. (Optional)
- ❑ Air conditioning equipment is installed and operating correctly.
- ❑ The area around the installed UPS system is clean and dust-free. (Eaton recommends that the UPS be installed on a level floor suitable for computer or electronic equipment.)
- ❑ Adequate workspace exists around the UPS and other cabinets.
- ❑ Adequate lighting is provided around all UPS equipment.
- ❑ A 120 Vac service outlet is located within 7.5 meters (25 feet) of the UPS equipment.
- ❑ Startup and operational checks are performed by an authorized Eaton Customer Service Engineer for installations with accessory cabinets.

Parallel System Installation Checklist

- ❑ Each cabinet in the parallel system is placed in its installed location.
- ❑ All conduits and cables are properly routed to the UPSs and to the parallel tie cabinet.
- ❑ All power cables are properly sized and terminated.
- ❑ Neutral conductors are installed between cabinets as required.
- ❑ ground conductors are properly installed.
- ❑ CAN wiring between the UPSs is properly installed.
- ❑ Pull chain wiring between the UPSs is properly installed.
- ❑ Adequate workspace exists around the UPSs, parallel tie cabinet, and other cabinets.
- ❑ Startup and operational checks are performed by an authorized Eaton Customer Service Engineer for parallel systems.

Notes

Section 2
Operation

Chapter 5 Understanding UPS Operation

5.1 UPS System Overview

The Eaton 9E UPS is a continuous-duty, solid-state, transformerless, three-phase, true online system that provides conditioned and uninterruptible AC power to the UPS system's output and critical load.

The basic system consists of a rectifier, battery converter, inverter, monitoring/operation control panel, integrated communication server, and digital signal processor (DSP) logic. Figure 5-1 shows the main elements of the UPS system.

If utility power is interrupted or falls outside the parameters specified in Chapter 9, "Product Specifications," the UPS uses a backup battery supply to maintain power to the critical load for a specified period of time or until the utility power returns. For extended power outages, the UPS allows you to either transfer to an alternative power system (such as a generator) or shut down your critical load in an orderly manner.

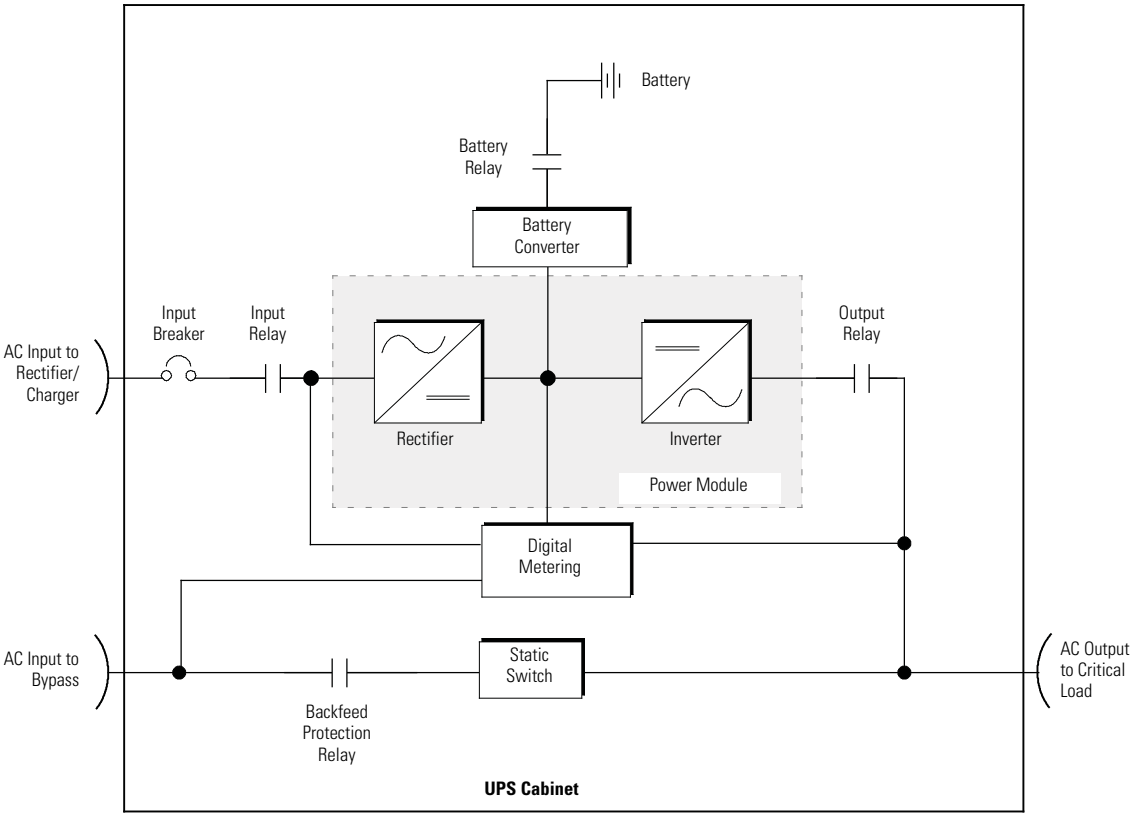

Figure 5-1. Main Elements of the UPS System

The emergency bypass consists of a continuous static switch, and a backfeed protection relay. The backfeed protection relay is located in series with the static switch. The static switch is armed and ready during normal operation.

5.2 Single UPS

A single UPS operates independently to support an applied load from the inverter, providing conditioned and uninterruptible AC power to the critical load from the output of the module. During an outage, the inverter continues to operate, supporting power to the load from the battery supply. If the unit requires service, applied loads are transferred to the internal bypass either automatically or manually. With the exception of an optional external battery cabinet, no other cabinets or equipment are required for the single UPS to successfully support its applied loads.

5.2.1 Modes

The Eaton 9EUPS supports a critical load in four different modes of operation:

- In High-Efficiency (HE) Normal mode, commercial AC power is supplied directly to the critical load through the internal bypass and transfers automatically to Standard Normal mode (double-conversion on demand) if an abnormal condition is detected. HE mode is the default normal operating mode.
- In Standard Normal mode, the critical load is supplied by the inverter, which derives its power from rectified utility AC power. In this mode, the battery charger also provides charging current for the battery, if needed.
- In Bypass mode, the critical load is directly supported by utility power.
- In Battery mode, the battery provides DC power, which maintains inverter operation. The battery supports the critical load.

The following paragraphs describe the differences in the UPS operating modes, using block diagrams to show the power flow during each mode of operation.

5.2.2 High-Efficiency Normal Mode

When the UPS is operating in HE mode, commercial AC power is supplied directly to the critical load through the internal bypass with the power module in a standby state. If a commercial power brownout, blackout, overvoltage, undervoltage, or out-of-tolerance frequency condition occurs the system forward transfers to normal mode (double-conversion on demand) or battery mode. When the input line returns to normal operating range, the UPS returns to HE operation. For charging batteries in HE mode, the UPS will revert to normal mode to charge the batteries, then return to HE mode when charge cycle is complete.

HE mode is the default normal operating mode, and not an alarm condition. While the UPS is in this mode, the NORMAL light on the front display will illuminate.

5.2.3 Standard Normal Mode

During Standard Normal mode, power for the system is derived from a utility input source through the rectifier input relay. Three-phase AC input power is converted to DC using IGBT devices to produce a regulated DC voltage to the inverter. When the battery relay is closed the battery is charged directly from the regulated rectifier output through a buck or boost DC converter, depending on the system voltage and the size of the battery string attached to the unit.

Figure 5-2 shows the path of electrical power through the UPS system when the UPS is operating in Normal mode.

The battery converter derives its input from the regulated DC output of the rectifier and provides either a boosted or bucked regulated DC voltage charge current to the battery. The battery is always connected to the UPS and ready to support the inverter should the utility input become unavailable.

The inverter produces a three-phase AC output to a customer's load without the use of a transformer. The inverter derives regulated DC from the rectifier and uses IGBT devices and pulse-width modulation (PWM) to produce a regulated and filtered AC output. The AC output of the inverter is delivered to the system output through the output relay.

If the utility AC power is interrupted or is out of specification, the UPS automatically switches to Battery mode to support the critical load without interruption. When utility power returns, the UPS returns to Normal mode.

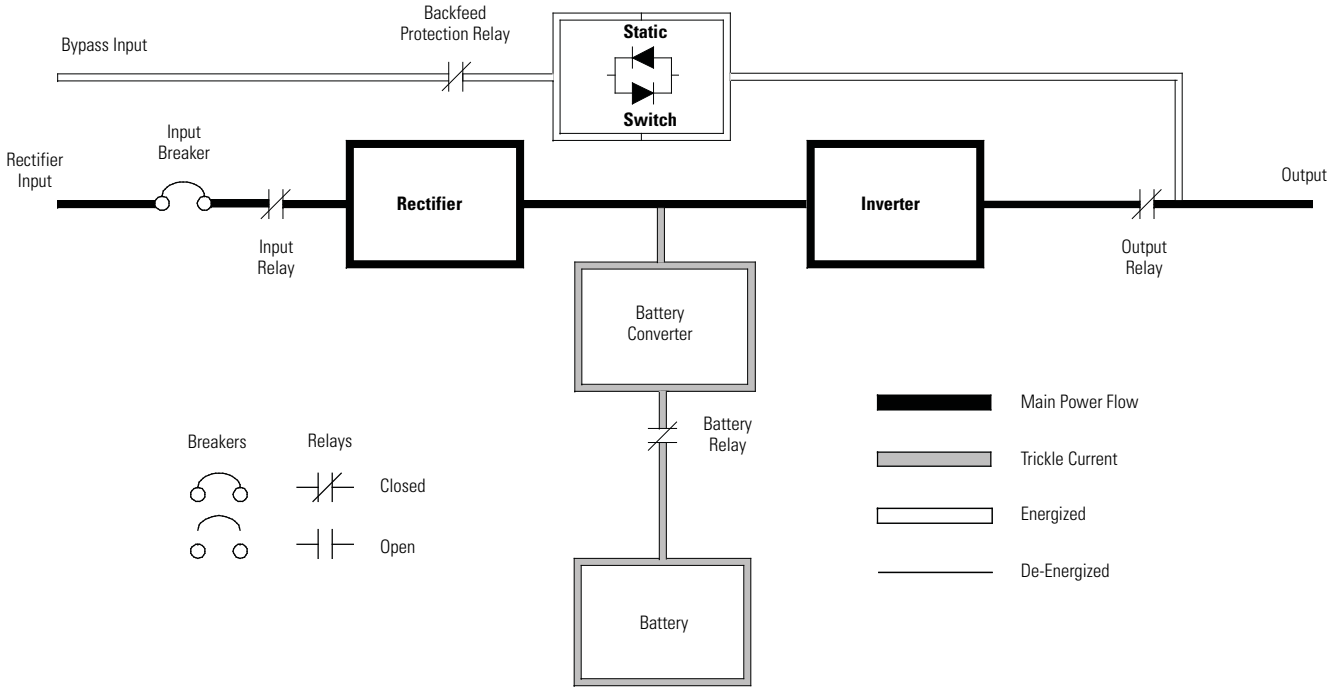

Figure 5-2. Path of Current Through the UPS in standard Normal Mode

If the UPS becomes overloaded or unavailable, the UPS switches to Bypass mode. The UPS automatically returns to Normal mode when the overload condition is cleared and system operation is restored within specified limits.

If the UPS suffers an internal failure, it switches automatically to Bypass mode and remains in that mode until the failure is corrected and the UPS is back in service.

5.2.4 Bypass Mode

CAUTION

The critical load is not protected from voltage or frequency fluctuations or power outages while the UPS is in Bypass mode.

The UPS automatically switches to Bypass mode if it detects an overload, load fault, or internal failure. The UPS can also be transferred from Normal mode to Bypass mode manually. The bypass source supplies the commercial AC power to the load directly. Figure 5-3 shows the path of electrical power through the UPS system when operating in Bypass mode.

In Bypass mode, the output of the system is provided with three-phase AC power directly from the system input. While in this mode, the output of the system is not protected from voltage or frequency fluctuations or power outages from the source. Some power line filtering and spike protection is provided to the load but no active power conditioning or battery support is available to the output of the system in the Bypass mode of operation.

The internal bypass is comprised of a solid-state, silicon-controlled rectifier (SCR) continuous static switch, and a backfeed protection relay. The static switch is used instantaneously anytime the inverter is unable to support the applied load. The continuous static switch is wired in series with the backfeed protection relay, and together they are wired in parallel with the rectifier and inverter.

The static switch, being an electronically-controlled device, can be turned on immediately to pick up the load from the inverter while inverter output relay opens to isolate the inverter. The backfeed protection relay is normally closed, ready to support the static switch unless the bypass input source becomes unavailable.

If the UPS transfers to Bypass mode from Normal mode due to any reason other than operator intervention, the UPS automatically attempts to transfer back to Normal mode (up to three times within a ten minute period). The fourth transfer locks the critical load to the bypass source and requires operator intervention to transfer.

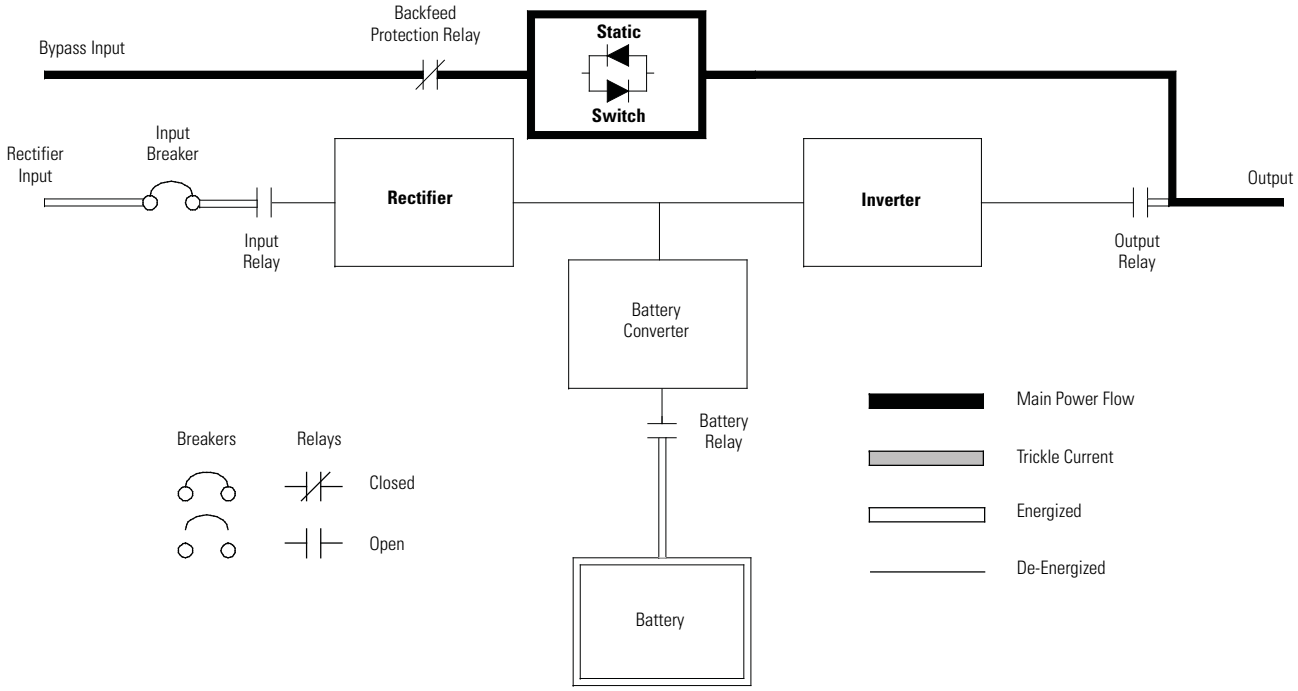

Figure 5-3. Path of Current Through the UPS in Bypass Mode

5.2.5 Battery Mode

The UPS automatically transfers to Battery mode if a utility power outage occurs, or if the utility power does not conform to specified parameters. In Battery mode, the battery provides emergency DC power that the inverter converts to AC power.

Figure 5-4 shows the path of electrical power through the UPS system when operating in Battery mode.

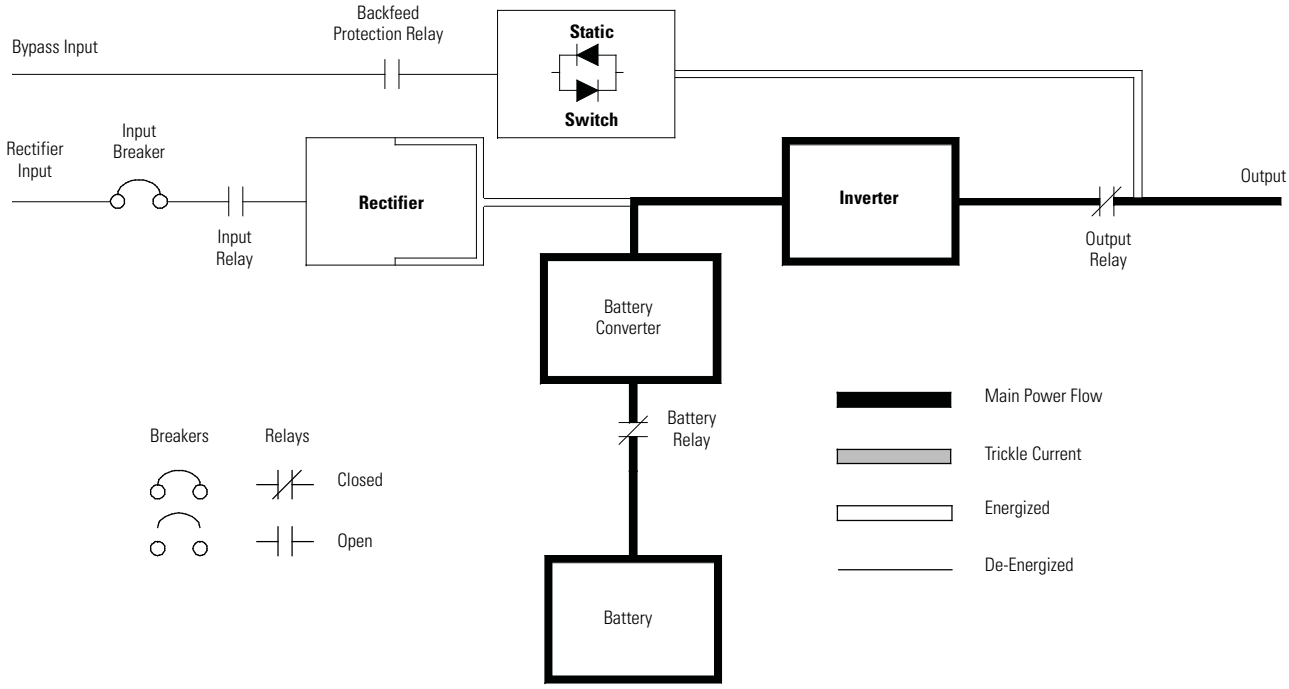

Figure 5-4. Path of Current Through the UPS in Battery Mode

During a utility power failure, the rectifier no longer has an AC utility source from which to supply the DC output voltage required to support the inverter. The input relay opens and the battery instantaneously supplies energy to the battery converter. The converter boosts the voltage so that the inverter can support the customer's load without interruption. If bypass is common with the rectifier input, the backfeed protection relay also opens. The opening of the input and the backfeed protection relays prevent system voltages from bleeding backwards through the static switch and rectifier snubber components to the utility source.

If the input power fails to return or is not within the acceptance windows required for normal operation, the battery continues discharging until a DC voltage level is reached where the inverter output can no longer support the connected loads. When this event occurs, the UPS issues another set of audible and visual alarms indicating SHUTDOWN IMMINENT. Unless the rectifier has a valid AC input soon, the output can be supported for only two minutes before the output of the system shuts down. If the bypass source is available, the UPS transfers to bypass instead of shutting down.

If at any time during the battery discharge the input power becomes available again, the input and the backfeed protection relays close and the rectifier begins to supply DC current to the converter and inverter. At this point, the unit returns to Normal mode. Depending on the total load and the duration of the battery discharge, battery current limit alarms may be seen for a short time due to the current required to recharge the battery.

5.3 Single UPS Unit System Oneline Configurations

The system oneline drawings in this section show the simplified internal structure of the UPS, battery supply, and basic maintenance bypass.

		Voltage		
Oneline Drawing	**UPS Model**	**Input**	**Output**	**System Type**
See Figure 5-5	9E–20 9E–30/20 9E–30/30	208/220	208/220	Single Reverse Transfer UPS with Internal Battery
See Figure 5-6	9E–20 9E–30/20 9E–30/30	208/220	208/220	Single Reverse Transfer UPS with External Battery

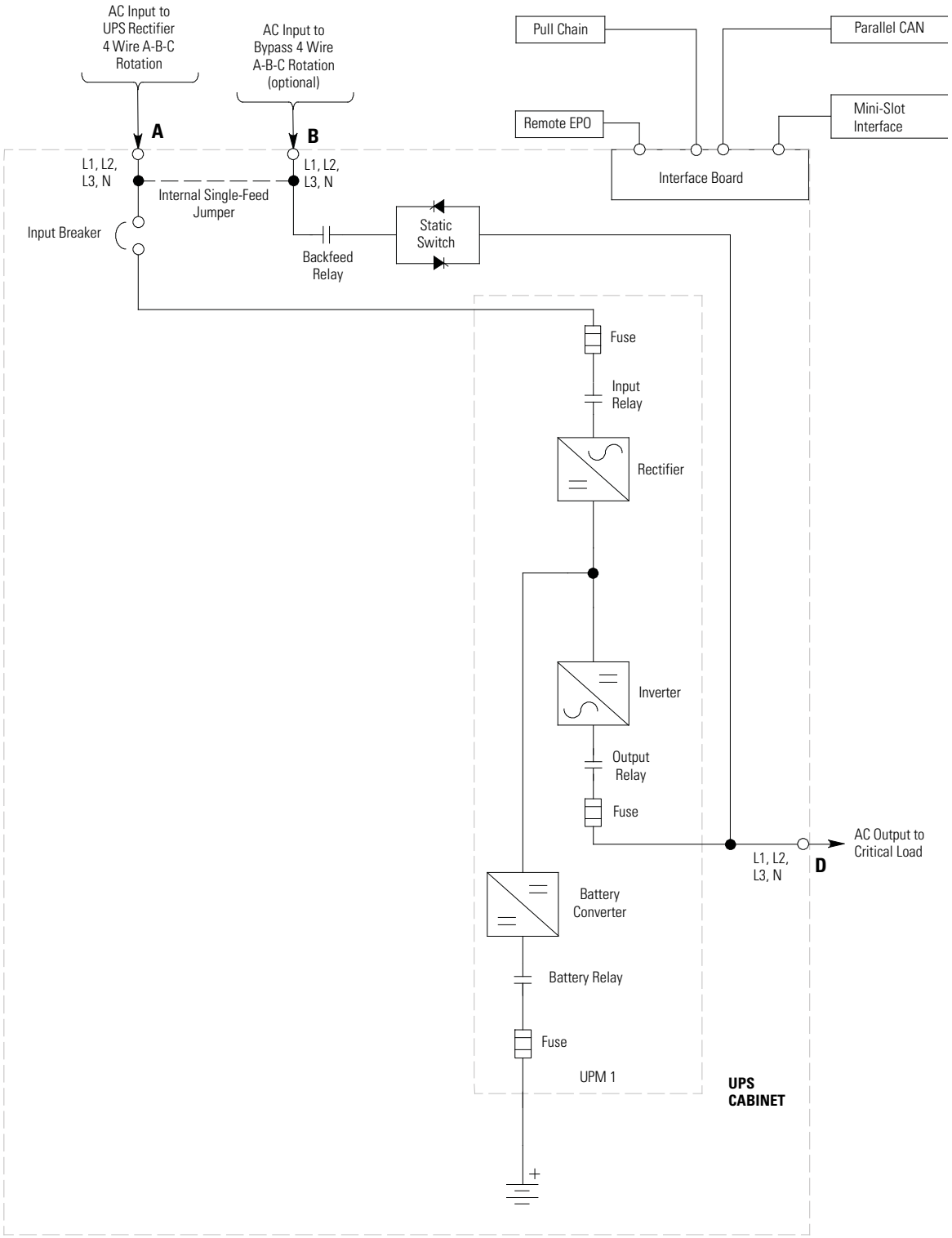

NOTE Callout letters **A**, **B, and D** map to Table 3-4.

Figure 5-5. UPS System Oneline – Internal Battery

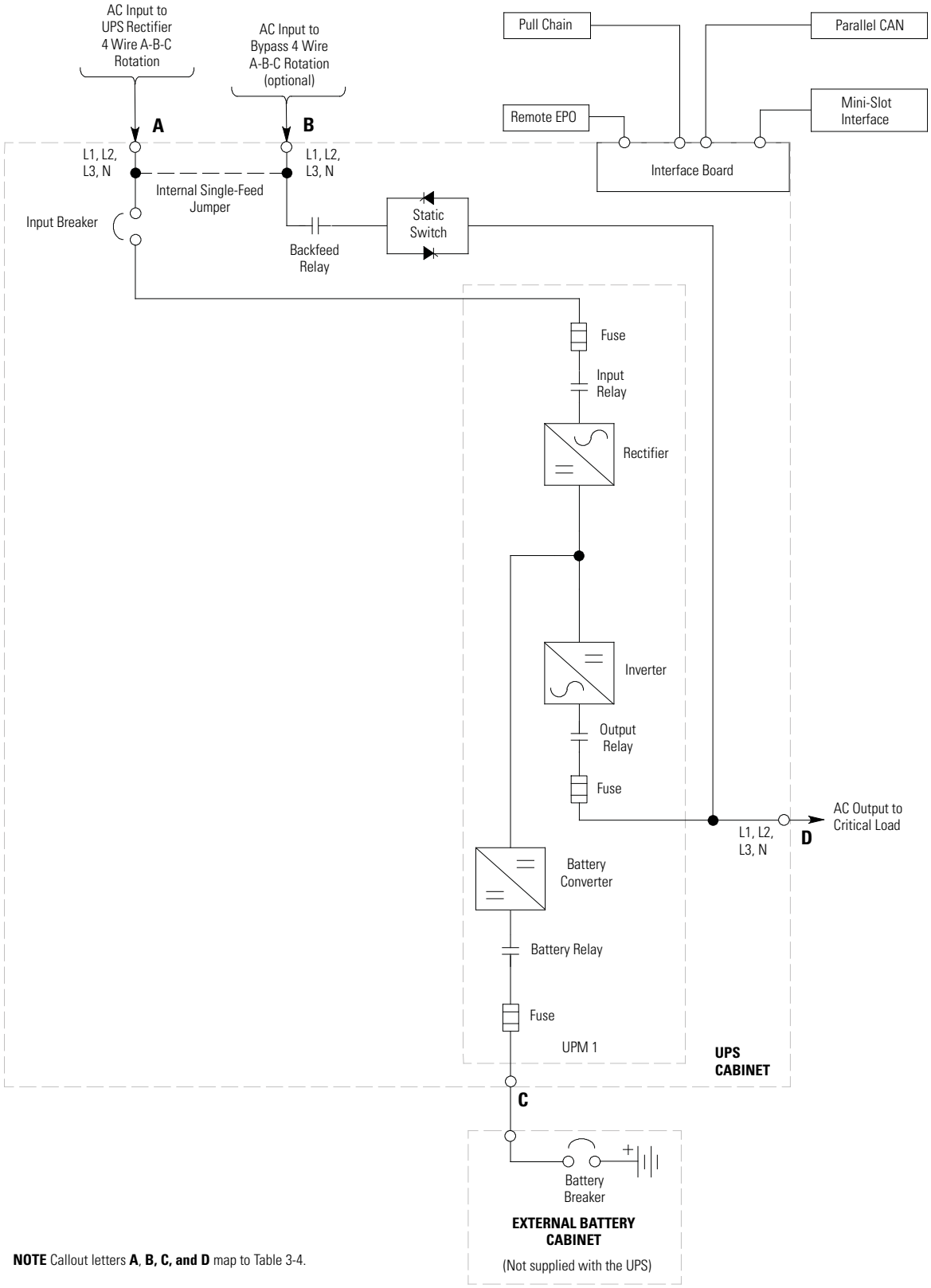

NOTE Callout letters **A**, **B, C, and D** map to Table 3-4.

Figure 5-6. UPS System Oneline – External Battery

Chapter 6 UPS Operating Instructions

This section describes how to operate the UPS.

NOTE 1 Before starting the UPS, ensure all installation tasks are complete and a preliminary startup has been performed by authorized service personnel. The preliminary startup verifies all electrical interconnections to ensure the installation was successful and the system operates properly.

NOTE 2 Read this section of the manual and have thorough knowledge of UPS operation before attempting to operate any of the controls.

6.1 UPS Controls and Indicators

The controls and indicators identified and described in this section are used to control and monitor UPS operation. Figure 6-1 shows the controls and indicators and Figure 6-2 shows the UPS breakers.

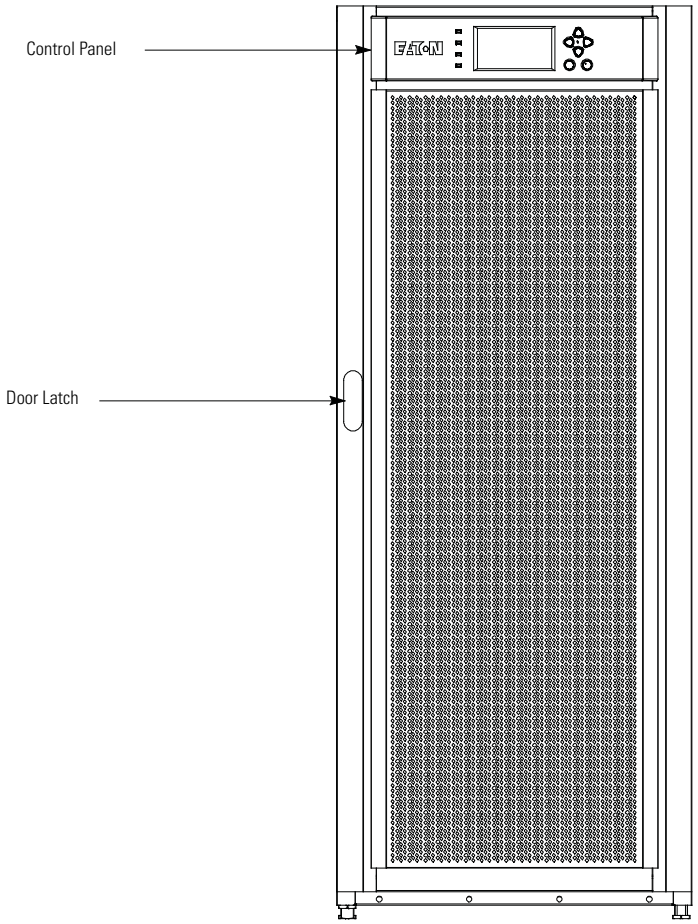

Figure 6-1. UPS Controls and Indicators

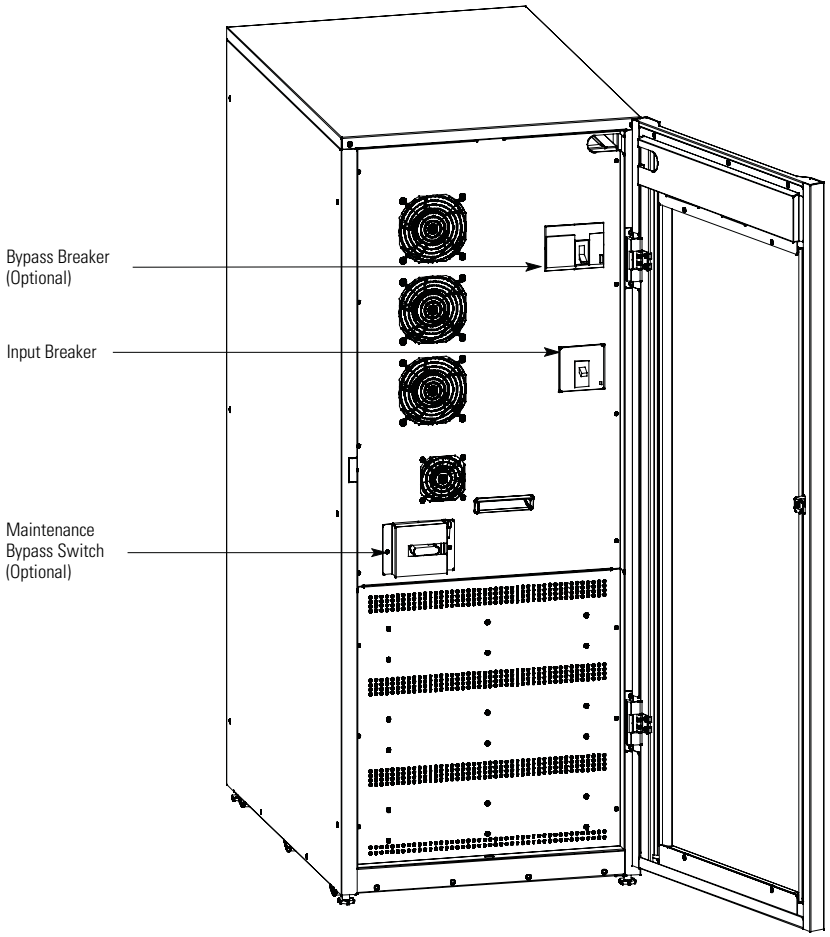

Figure 6-2. UPS Breakers

6.1.1 Control Panel

The control panel is used to set up and control the UPS, and to monitor UPS operation. For a description of the UPS control panel functions, see paragraph 6.2.

6.1.2 Circuit Breakers

- **Input Circuit Breaker** – The Input circuit breaker is used to control the AC input to the UPS rectifier.
- **Bypass Circuit Breaker** – The optional Bypass circuit breaker is used to control the AC input to the UPS bypass.
- **Maintenance Bypass Switch** – The optional Maintenance Bypass switch can be used to partially isolate the UPS so that a limited number of components can be serviced without interrupting power to critical systems.

6.2 Using the Control Panel

The following paragraphs describe the UPS control panel, including controls and indicators, and how to monitor UPS operation. The control panel (see Figure 6-3) is located on the front door of the UPS.

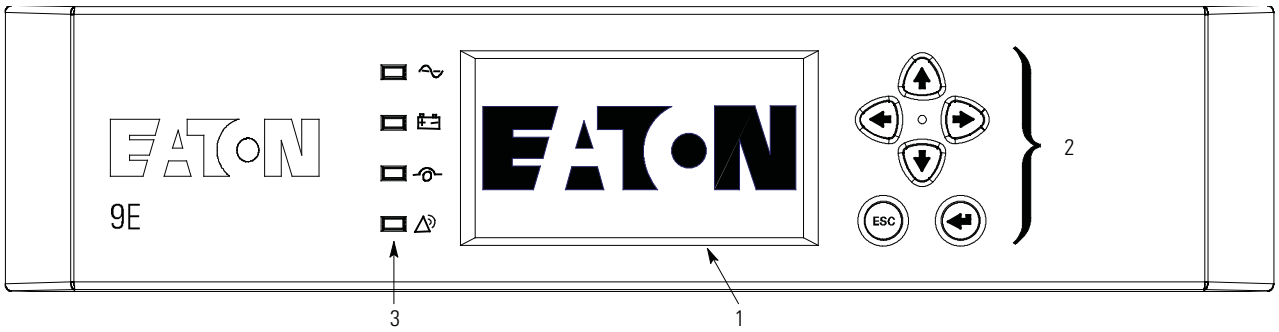

Figure 6-3. UPS Control Panel

The control panel consists of:

- A liquid crystal display (LCD) (**1**)
- Menu navigation pushbutton switches (**2**)
- A vertical column of status indicators (**3**). See paragraph 6.2.1.

The following paragraphs describe using the UPS control panel to monitor the UPS. See paragraph 6.3 for use of the operational controls.

When the unit powers up, the screen displays the Eaton logo as shown in Figure 6-3. To advance to the Main Menu and Mimic screen, press any control panel pushbutton once.

6.2.1 Status Indicators

The four symbols on the right side of the control panel are status indicators. These colored light emitting diode (LED) lamps work with the alarm horn to let you know the operating status of the UPS.

Table 6-1 describes the status indicators.

Table 6-1. Status Indicators

Indicator	Status	Description
Green	On	The UPS is in Normal mode. The power module is supplying power to the critical load.
	Off	The UPS is turned off.
Yellow	On	The UPS is in Battery mode. Because Battery mode is a normal condition of the UPS, the Normal indicator also remains illuminated.
Yellow	On	The UPS is in Bypass mode. The critical load is supported by the bypass source. The Normal indicator is not illuminated when the system is in Bypass mode.
Red	On	The UPS has an active alarm and requires immediate attention. The LCD shows the highest priority active alarms. All alarms are accompanied by an audible horn. To silence the horn, press any control panel pushbutton once. The Alarm indicator may be illuminated along with other indicators.
	Flashing	There is a new UPS alarm condition. The indicator flashes until acknowledged by pressing any control panel pushbutton once.

6.2.2 System Events

When the UPS system is running in Normal mode, it continually monitors itself and the incoming utility power. In Battery or Bypass modes, the UPS may issue alarms to let you know exactly what event caused the change from Normal mode. System events on the UPS can be indicated by horns, lights, messages, or all three.

Select the **EVENTS** symbol from the menu bar on the main menu screen to display the active events screen. This screen shows any currently active alarms, notices, or commands. This screen shows any currently active alarms, notices, or commands. For more information on using the events screen, see paragraph 6.2.6.

- **System Event Horns** – The system event horn beeps to alert an operator that an event needing attention is taking place. The horn cycles at a half-second rate.
- **System Event Indicators** – The status indicators on the UPS control panel work with the event horn to let the operator know when the UPS is operating in any mode other than normal. Only the Normal mode indicator is illuminated during normal UPS system operation. The other indicators illuminate to indicate alarms or events. When an alarm occurs, first check these indicators to see what type of event has taken place. For descriptions of the status indicators, see paragraph 6.2.1.
- **System Event Messages** – When a system event occurs, a message appears on the LCD in the UPS status area. This message is also written to the Events Log and may be added to the History Log. The messages are divided into four categories: alarms, notices, status, and commands.

6.2.3 Using the LCD and Pushbuttons

The LCD on the control panel provides an operator interface with the UPS system. Figure 6-4 identifies the display areas discussed in the following sections.

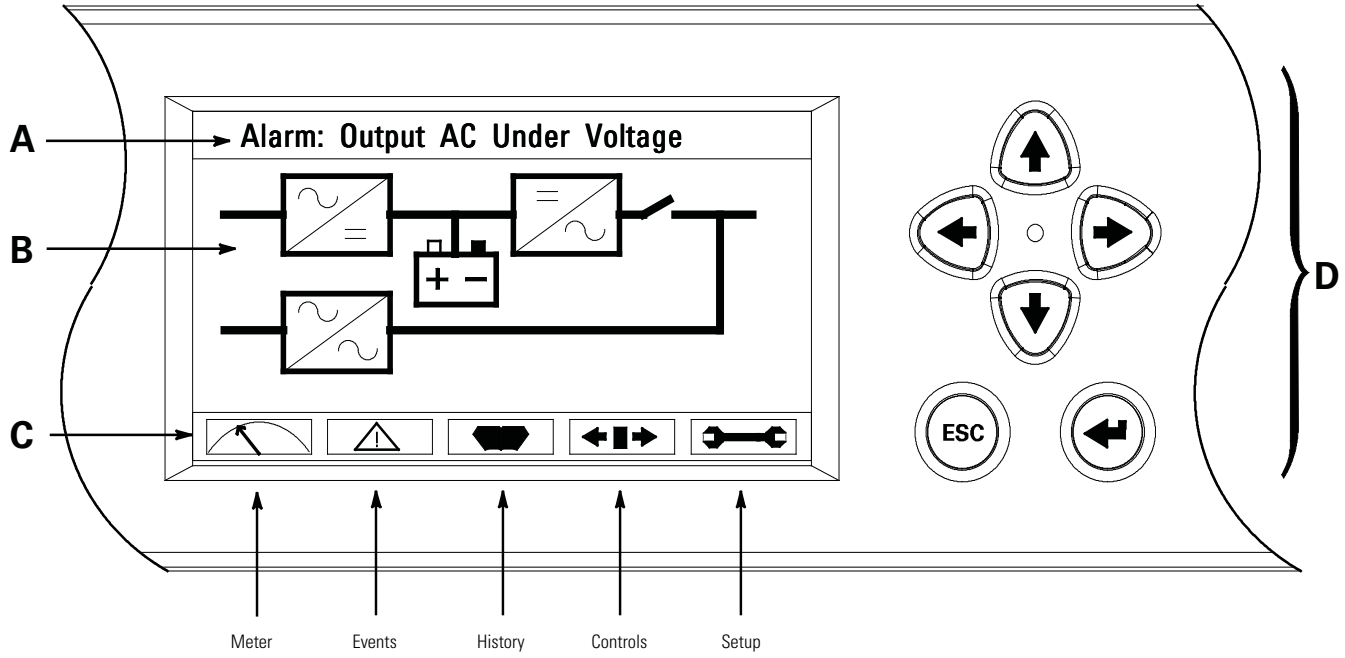

Figure 6-4. Parts of the LCD

A The UPS status area automatically scrolls between the Eaton model number, current date and time, active alarms, UPS status, load percent, and battery runtime for the UPS. The top line of display blinks while scrolling when the system needs attention. Some notices and alarms may be accompanied by an audible horn. To silence the horn, press any control panel pushbutton once. Shown is a typical alarm message. For more information about alarms and notices, see paragraph 6.2.2.

B The information area contains data about UPS status and operations.

C The menu bar shows the symbols of the available screens. To select a screen, highlight the screen symbol using the navigation pushbuttons and then press the **RETURN** pushbutton.

D The navigation pushbuttons function depending on the screen displayed. Use the Up, Down, Left, and Right pushbuttons to scroll through available screens and the Esc and Enter pushbuttons to select menu screens and functions.

You can use the LCD and the pushbuttons to:

- Look at a log of UPS events (alarms, notices, and commands) (see paragraph 6.2.6)
- Monitor UPS operation (see paragraph 6.2.6)
- Set UPS parameters (see paragraph 6.2.6)
- Control UPS operation (see paragraphs 6.2.6 and 6.2.7)

After approximately 10 minutes, the display screen darkens. To restore the screen, press any pushbutton once.

6.2.4 Using the Menu

The UPS menu bar allows you to display data in the information area to help you monitor and control UPS operation. Table 6-2 shows the basic menu structure.

Table 6-2. Display Function Menu Map

Menu Option	Description
METERS	Displays performance meters for the system or critical load.
EVENTS	Displays the list of Active System Events.
HISTORY	Displays a historical log of system events.
CONTROLS	Displays the System Control screen.
SETUP	Allows you to set the date and time for the time stamp, set the display language, the unit name, and meter subscripts, change the password, and view the firmware version numbers.
ESC	Returns to Main Menu and Mimic screen from the Meters, Events, History, Controls, or Setup screens. Returns to the main System Setup Level screen from a setup submenu.
↵	Return arrow acknowledges or executes a command, or saves a setting.
↑ ↓	Up and down arrows scroll through screens and lists or highlight settings.
← →	Left and right arrows select or adjust settings displayed on the screen.

6.2.5 Mimic Screen

Figure 6-5 shows the Main Menu and Mimic screen. To select the Mimic screen from the Meters, Events, History, Controls, or Setup screens, press the **ESC** pushbutton on the current menu bar.

The Mimic screen shows the internal components of the UPS cabinet and a real-time graphical representation of the operating status of the system.

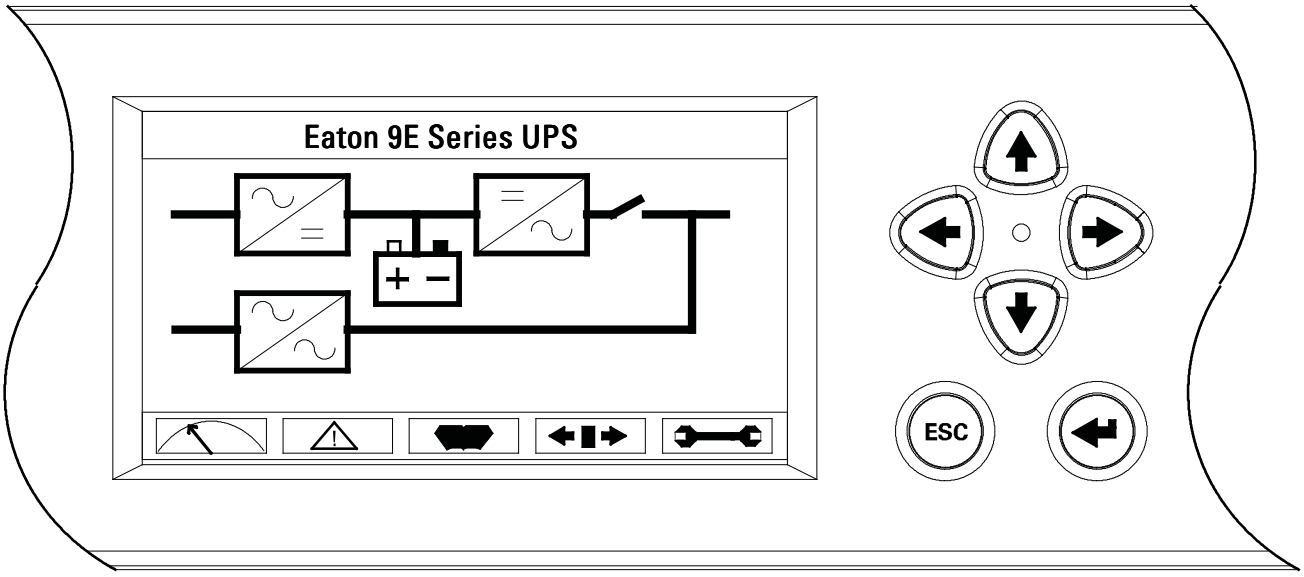

Figure 6-5. Main Menu and Mimic Screen

6.2.6 Display Menu Operation

Table 6-3 describes the menu functions and how to use them.

Table 6-3. Display Menu Operation

Function	Subfunction	Operation
Meters – UPS		The Meter screens show the UPS meter readings for the unit. The default voltage displayed on these screens is phase-to-neutral. These can be changed to display the voltage phase-to-phase (A-B, B-C, C-A). Use the **LEFT** or **RIGHT** arrow pushbuttons to select the **METER** symbol on the main menu bar, to display the Meter screens. To scroll through the meter screens, press the **UP** or **DOWN** arrow pushbutton. The current UPS readings are displayed in the information area of the screen.
	Output – UPS	The Output screen shows output voltage (phase to neutral), output current (each phase), and frequency being supplied by the UPS, as well as the kVA, kW, and power factor measurements.
	Input – UPS	The Input screen shows input voltage (phase to neutral), input current (each phase), and frequency of the incoming utility source, as well as the kVA, kW, and power factor measurements.
	Bypass	The Bypass screen shows the bypass input voltage (phase to neutral), input current (each phase), and frequency of the incoming utility source, as well as the kVA, kW, and power factor measurements.
	Battery – UPS	The Battery screen displays the battery voltage (Vdc) and the battery current (Idc).
Events		Use the **LEFT** or **RIGHT** arrow pushbuttons to select the **EVENTS** symbol on the main menu bar to display the Events screens. A listing of all system events that are currently active is displayed. The most recent event is listed first. As events clear, they are removed from the Events listing. To scroll through the events, press the **UP** or **DOWN** arrow pushbutton.
History		Use the **LEFT** or **RIGHT** arrow pushbuttons to select the **HISTORY** symbol on the main menu bar to display the History screen. The history Log lists up to 512 events in chronological order, with the most recent event listed last (once 512 is reached, the earliest event is overwritten). The end of the log (the most recent events) is displayed first; scroll upward to view older event listings. To scroll through the events, press the **UP** or **DOWN** arrow pushbutton.
Setup – User	Function Selection	This screen can be used to display user information and show the firmware versions installed. Use the **LEFT** or **RIGHT** arrow pushbuttons to select the **SETUP** symbol on the main menu bar to display the Setup screen. Use the **UP** or **DOWN** arrow pushbutton to highlight the function desired, then press the **RETURN** pushbutton to display the function screen. See Figure 6-6 for a typical screen display.
	User Info	The User Info screen provides the model, CTO and serial numbers of the UPS, the Output voltage, frequency, and kVA rating, the input voltage rating, and the battery run time rating. Use the **LEFT** or **RIGHT** arrow pushbuttons to select **USER** on the Setup menu bar. Use the **UP** or **DOWN** arrow pushbutton. to select Info, then press the **RETURN** pushbutton to display the function screen. To return to the System Setup screen, press the ESC pushbutton.
	About	The About screen provides the firmware version numbers installed on the UPS. Use the **LEFT** or **RIGHT** arrow pushbuttons to select **USER** on the Setup menu bar. Use the **UP** or **DOWN** arrow pushbutton. to select About. To return to the System Setup screen, press the **ESC** pushbutton.
Setup – Config (System Level 1 Setup)	Password	To enter a password if required, use the **LEFT** or **RIGHT** arrow pushbutton to select the password character position. Use the **UP** or **DOWN** arrow pushbutton to change the password character. Once the password is entered, select **DONE** and then press the **RETURN** pushbutton. The System Setup Level 1menu screen is displayed. The default System Setup Level 1 password is 0101.
	Function Selection	This screen can be used to set the date and time, change the display language, enter a unit name, change the meter style, perform lamp test, clear the history log, and enter a password to access Level 1 functions. Use the **LEFT** or **RIGHT** arrow pushbuttons to select the **SETUP** symbol on the main menu bar to display the Setup screen. Use the **LEFT** or **RIGHT** arrow pushbutton to select **CONFIG** on the Setup menu bar. Enter a password if required.
	Clock	The Clock Setup screen allows the selection of either month/day/year or day/month/year formats and daylight savings time for display on the screen and for logging events in the Event and History Logs. Use the **UP** or **DOWN** arrow pushbutton to select **CLOCK** to display the Clock screen. Use the **UP** or **DOWN** arrow pushbutton to highlight the desired format, then press the **RETURN** pushbutton to display the Set Date and Time screen. To return to the System Setup screen, press the **ESC** pushbutton.

Table 6-3. Display Menu Operation

Function	Subfunction	Operation
Setup – Config (System Level 1 Setup) (continued)	Set Date and Time MM/DD/YYYY	The Set Date and Time MM/DD/YYYY screen allows the internal date and time of the UPS to be set in the month/day/year format. The date and time information is used for display on the screen and for logging events in the Event and History Logs. Use the **LEFT** or **RIGHT** arrow pushbutton to highlight the setting to be changed. Use the **UP** or **DOWN** arrow pushbutton to make the change. When finished making changes, use the **LEFT** or **RIGHT** arrow pushbutton to highlight **SAVE** and the **UP** or **DOWN** arrow pushbutton to select **YES**. To complete the save function and return to the System Setup screen, select the **RETURN** arrow pushbutton.
	Set Date and Time DD/MM/YYYY	The Set Date and Time DD/MM/YYYY screen allows the internal date and time of the UPS to be set in the day/month/year format. The date and time information is used for display on the screen and for logging events in the Event and History Logs. Use the **LEFT** or **RIGHT** arrow pushbutton to highlight the setting to be changed. Use the **UP** or **DOWN** arrow pushbutton to make the change. When finished making changes, use the **LEFT** or **RIGHT** arrow pushbutton to highlight **SAVE** and the **UP** or **DOWN** arrow pushbutton to select **YES**. To complete the save function and return to the System Setup screen, select the **RETURN** arrow pushbutton.
	Language	The Language Setup screen allows the display menu language to be selected. Use the **UP** or **DOWN** arrow pushbutton to highlight Language, then press the **RETURN** pushbutton to display the Language screen. Use the **UP** or **DOWN** arrow pushbutton to highlight the desired language, then press the **RETURN** pushbutton. To return to the System Setup screen, press the **ESC** pushbutton.
	Unit Name	The Unit Name Setup screen allows a unit name to be entered. Use the **UP** or **DOWN** arrow pushbutton to highlight Unit Name, then press the **RETURN** pushbutton to display the Unit Name screen. Use the **LEFT** or **RIGHT** arrow pushbutton to highlight the character to be changed. Use the **UP** or **DOWN** arrow pushbutton to make the change. When finished making changes, use the **LEFT** or **RIGHT** arrow pushbutton to highlight **SAVE** and the **UP** or **DOWN** arrow pushbutton to select **YES**. To complete the save function and return to the System Setup screen, select the **RETURN** arrow pushbutton. To return to the System Setup screen, press the **ESC** pushbutton.
	Meters	The Meters Setup screen allows the Meters Screen display style to be selected. Use the **UP** or **DOWN** arrow pushbutton to highlight Meters, then press the **RETURN** pushbutton to display the Meters screen. Use the **UP** or **DOWN** arrow pushbutton. to highlight the desired style, then press the **RETURN** pushbutton. To return to the System Setup screen, press the **ESC** pushbutton.
	Lamp Test	The Lamp Test screen allows the control panel status lamps to be tested. Use the **UP** or **DOWN** arrow pushbutton to highlight Lamp Test, then press the **RETURN** pushbutton to illuminate the status lamps. To return to the System Setup screen, press the **ESC** pushbutton.
	Clear Log	The Clear Log screen allows the history log to be cleared. Use the **UP** or **DOWN** arrow pushbutton to highlight Clear Log, then press the **RETURN** pushbutton to clear the log. To return to the System Setup screen, press the **ESC** pushbutton.
	P/W	The P/W screen is used to change the System Setup Level 1 password. Use the **UP** or **DOWN** arrow pushbutton to highlight P/W, then press the **RETURN** pushbutton to display the P/W screen. Use the **LEFT** or **RIGHT** arrow pushbutton to select the password character position. Use the **UP** or **DOWN** arrow pushbutton to change the password character. Once the password is entered, select **CHANGE** and then press the **RETURN** pushbutton.
Controls		See paragraph 6.2.7 for details.

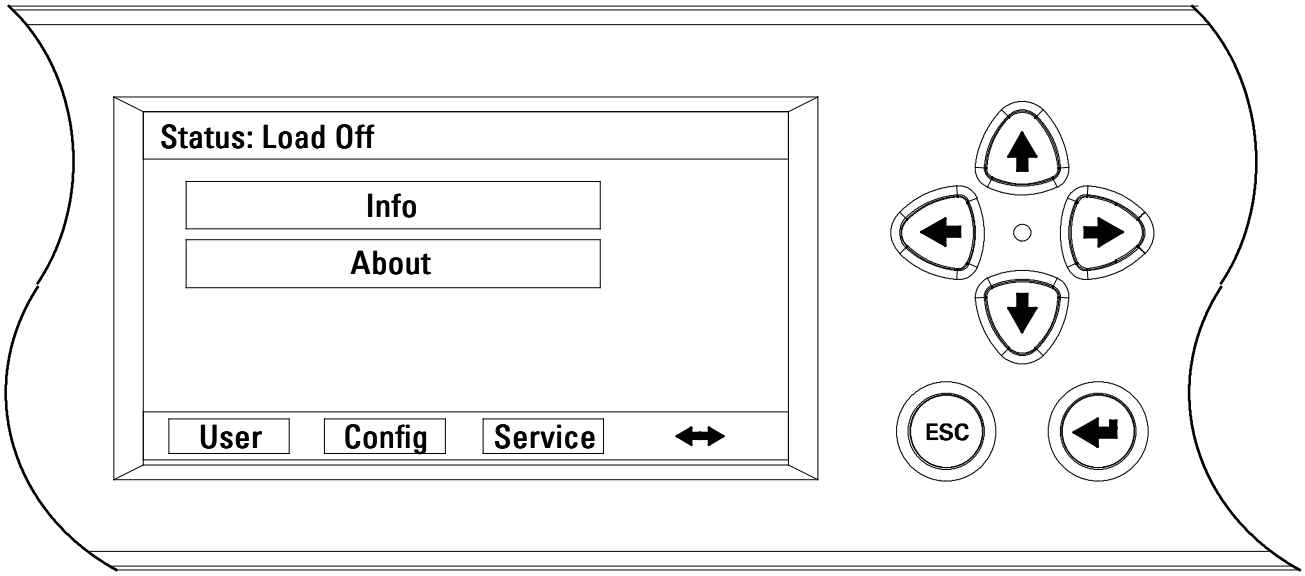

Figure 6-6. Typical Initial Setup Screen

6.2.7 System Controls

Select the **CONTROLS** symbol on the main menu bar, then press the **RETURN** pushbutton to display the Controls screen. Normal operation, transfer to bypass, load off, and charger control commands are controlled through this screen. In addition, the screen displays the current status of the UPS. Figure 6-7 shows the System Control screen.

Use the ↑ or ↓ pushbutton to highlight the command screen desired, then press the **RETURN** pushbutton to display the command menu screen.

Use the ← or → pushbutton to highlight the command desired.

Table 6-4 describes the control functions and provides instructions to access and use the command menu screens.

Table 6-5 lists the typical System Status Screen Messages that are displayed during UPS operation.

For detailed information about using the System Controls, see paragraph 6.3.

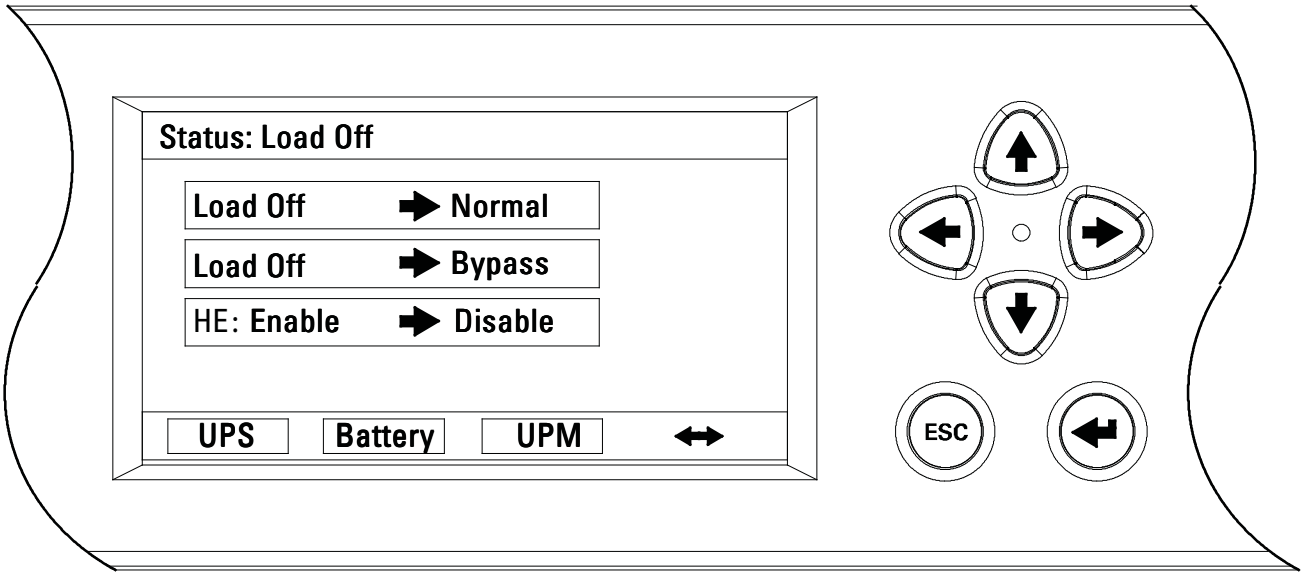

Figure 6-7. Typical System Control Screen

Table 6-4. Command Menu Operation

Function	Subfunction	Operation
UPS Control Commands		Use the up or down arrow pushbutton to highlight the command function desired, then press the **RETURN** pushbutton to execute the command or proceed to further command screens.
	Normal Mode	Starts the UPS in High Efficiency (HE) Normal mode or transfers the UPS to HE Normal mode from Bypass mode.
	Bypass Mode	Starts the UPS in Normal mode or transfers the UPS to Normal mode from Bypass mode.
	High-Efficiency (HE) Mode	Transfers the from HE Normal mode to Standard Normal mode. Transfers the from Standard Normal mode to HE Normal mode.
Battery Control Commands		Use the up or down arrow pushbutton to highlight the command function desired, then press the **RETURN** pushbutton to execute the command.
	Charger	Turns the battery charger on.
	Resting	Turns the battery charger off.

Table 6-5. Typical System Status Messages

Function	Message
UPS	Load Off; Bypass; Online, HE
Bypass	Off; On; Available
Charger	Charger Resting; Charger

6.3 Single UPS Operation

NOTE 1 If an External Battery Cabinet (EBC) is installed, refer to the *Eaton 9E External Battery Cabinet Installation Manual* listed in paragraph 1.8 for EBC battery breaker location.

NOTE 2 If an Integrated Transformer Cabinet (ITC) is installed, refer to the *Eaton 9E Integrated Transformer Cabinet Installation Manual* listed in paragraph 1.8 for ITC transformer breaker locations.

NOTE 3 If an Integrated Accessory Cabinet-Distribution (IAC-D) is installed, refer to the *Eaton 9E Integrated Accessory Cabinet-Distribution Installation and Operation Manual* listed in paragraph 1.8 for operating instructions.

NOTE 4 If an Integrated Accessory Cabinet-Bypass (IAC-B) is installed, refer to the *Eaton 9E Integrated Accessory Cabinet-Tie and Bypass Installation and Operation Manual* listed in paragraph 1.8 for operating instructions.

6.3.1 Starting the UPS in High-Efficiency Normal Mode (Default Mode)

To start the UPS system:

1. Unfasten the front door by lifting the latch from the bottom and turning to the right (counterclockwise) and swing the door open (see Figure 6-1).
2. Verify that the input breaker is open.
3. If the UPS contains a bypass breaker, verify that the bypass breaker is open.
4. Close the UPS input feeder circuit breaker.
5. If the UPS contains a bypass breaker, close the UPS Bypass input feeder circuit breaker.
6. If an ITC with an input transformer is installed, close the input and UPS input breakers.
7. If an ITC with an input and output transformer is installed, close the input, UPS input, and UPS output breakers.
8. Close the input breaker.
9. If the UPS contains a bypass breaker, close the bypass breaker.
10. Close the door and secure the latch.

NOTE If two EBCs are installed, EBC 1 must be closed to supply DC input to the UPS. EBC 2 may be left open, but battery runtime will be reduced.

11. If EBCs are installed, close the battery breakers.
12. Observe the UPS control panel display becoming active, indicating logic power.
13. Verify no alarms are active.
14. Select the **CONTROLS** symbol on the main menu bar. The System Control screen is displayed.
15. If not already selected, select UPS on the System Control screen.
16. On the UPS System Control screen, select the **LOAD OFF ➡ NORMAL** command, then press the **RETURN** pushbutton.

17. If requested, enter the Level 1 password. Default password is 1111.

    The rectifier and inverter turn on. The inverter continues to ramp up to full voltage.

    Once the inverter reaches full voltage, the UPS output relay closes and the static switch turns off. Power is now supplied to the critical load in HE Normal mode. It takes approximately one minute for the UPS to achieve HE Normal mode.

    The Normal status indicator is illuminated.

18. If an ITC with an input and output transformer is installed, close the output breaker.

6.3.2 Starting the UPS in Bypass Mode

If the inverter output of the UPS is not available and the critical load needs to be energized:

⚠ CAUTION

In Bypass mode, the critical load is not protected from commercial power interruptions and abnormalities.

1. Unfasten the front door by lifting the latch from the bottom and turning to the right (counterclockwise) and swing the door open (Figure 6-1).
2. Verify that the input breaker is open.
3. If the UPS contains a bypass breaker, verify that the bypass breaker is open.
4. Close the UPS input feeder circuit breaker.
5. If the UPS contains a bypass breaker, close the UPS Bypass input feeder circuit breaker.
6. If an ITC with an input transformer is installed, close the input and UPS input breakers.
7. If an ITC with an input and output transformer is installed, close the input, UPS input, and UPS output breakers.
8. Close the input breaker.
9. If the UPS contains a bypass breaker, close the bypass breaker.
10. Close the door and secure the latch.

NOTE If two EBCs are installed, EBC 1 must be closed to supply DC input to the UPS. EBC 2 may be left open, but battery runtime will be reduced.

11. If EBCs are installed, close the battery breakers.
12. Observe the UPS control panel display becoming active, indicating logic power.
13. Verify no alarms are active.
14. Select the **CONTROLS** symbol on the main menu bar. The System Control screen is displayed.
15. If not already selected, select UPS on the System Control screen.
16. On the UPS System Control screen, select the **LOAD OFF ➡ BYPASS** command, then press the **RETURN** pushbutton.

    The critical load is immediately supplied by the bypass source, in Bypass mode.

    The **BYPASS** status indicator is illuminated.

17. If an ITC with an input and output transformer is installed, close the output breaker.

    The critical load is immediately supplied by the bypass source, in Bypass mode.

6.3.3 Transfer from Normal to Bypass Mode

To transfer the critical load to Bypass mode:

CAUTION

In Bypass mode, the critical load is not protected from commercial power interruptions and abnormalities.

1. Select the **CONTROLS** symbol on the main menu bar. The System Control screen is displayed.
2. If not already selected, select UPS on the System Control screen.
3. On the UPS System Control screen, select the **NORMAL** ➡ **BYPASS** command, then press the **RETURN** pushbutton.

   The UPS transfers to Bypass mode.

   The **BYPASS** status indicator is illuminated. The power module remains on.

WARNING

Power is present inside the UPS cabinet.

6.3.4 Transfer from Bypass to Normal Mode

To transfer the critical load to Normal mode:

1. Select the **CONTROLS** symbol on the main menu bar. The System Control screen is displayed.
2. If not already selected, select UPS on the System Control screen.
3. On the UPS System Control screen, select the **BYPASS** ➡ **NORMAL** command, then press the **RETURN** pushbutton.

   The UPS transfers to Normal mode. If the power module is not available, the system remains on bypass and an alarm sounds.

   The **NORMAL** status indicator is illuminated.

6.3.5 Transfer from HE Normal Mode to Standard Normal Mode

To transfer the load to Standard Normal mode:

1. Select the **CONTROLS** symbol on the main menu bar. The System Control screen is displayed.
2. If not already selected, select UPS on the System Control screen.
3. On the UPS System Control screen, select the **HE: ENABLE** ➡ **DISABLE** command, then press the **RETURN** pushbutton.

   The UPS transfers to Standard Normal mode.

   The **NORMAL** status indicator is illuminated.

6.3.6 Transfer from Standard Normal Mode to HE Normal mode

To transfer the load to HE Normal mode:

1. Select the **CONTROLS** symbol on the main menu bar. The System Control screen is displayed.
2. If not already selected, select UPS on the System Control screen.
3. On the UPS System Control screen, select the **HE: DISABLE ➡ ENABLE** command, then press the **RETURN** pushbutton.

   The UPS transfers to HE Normal mode if no abnormal power conditions are detected. If abnormal power conditions are detected, the UPS will wait and transfer to HE mode when conditions are cleared.

   The **NORMAL** status indicator is illuminated.

6.3.7 Transfer from Normal Mode to Maintenance Bypass

To transfer the load to maintenance bypass:

1. Transfer the load to bypass mode by performing the procedure in paragraph 6.3.3.

NOTE The interlock switch (see Figure 6-8) will automatically transfer the load to bypass when the maintenance bypass cover is removed if not already transferred using the control panel.

2. Remove cover from maintenance bypass switch (see Figure 6-8).
3. Turn the maintenance bypass switch to the MAINTENANCE position.

   The UPS is now bypassed, with the load powered directly by utility power.
4. Open the UPS input circuit breaker.

⚠ WARNING

Power is present inside the UPS cabinet.

6.3.8 Transfer from Maintenance Bypass to Normal Mode

To transfer the load to Normal mode:

1. Close the UPS input circuit breaker.
2. Restart the UPS in bypass mode by performing the procedure in paragraph 6.3.2.
3. Verify that the UPS is in bypass mode.
4. Turn the maintenance bypass switch to the UPS position.
5. Reinstall the cover over the maintenance bypass switch.
6. Transfer the load to normal by performing the procedure in paragraph or 6.3.4.

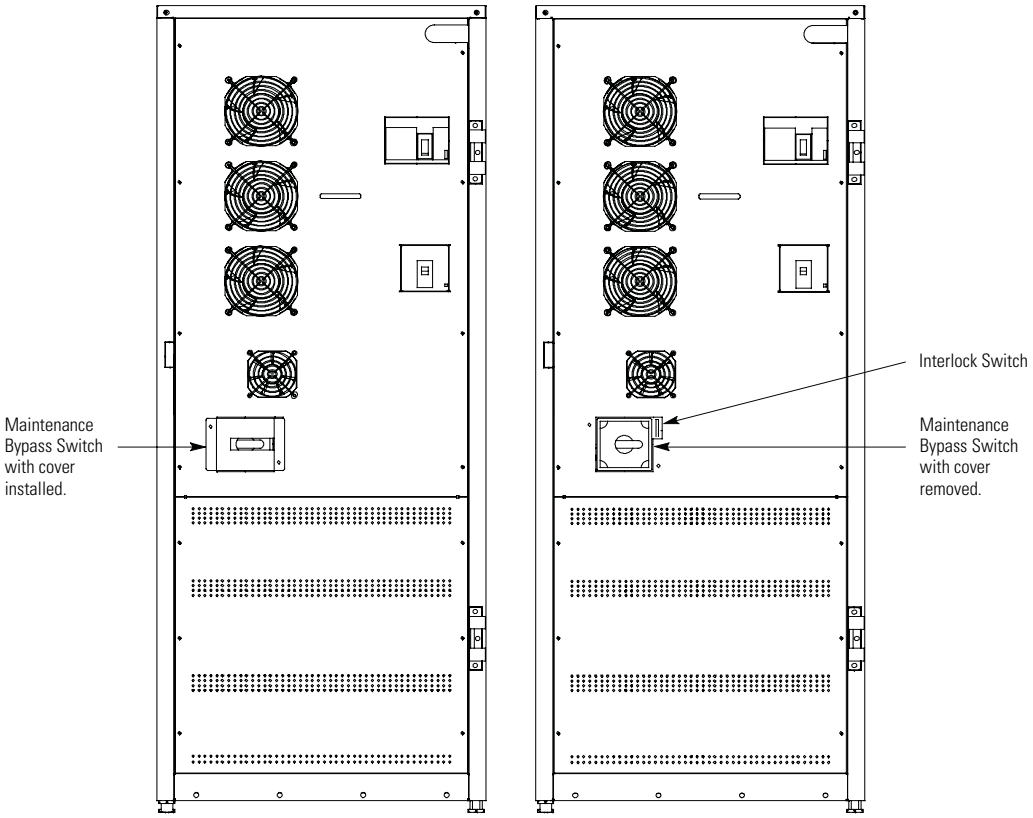

Figure 6-8. Maintenance Bypass Switch

6.3.9 UPS and Critical Load Shutdown

To perform maintenance or service on the critical load, shut down power to the load:

1. Turn off all equipment that is being powered by the UPS.
2. Perform the LOAD OFF procedure in paragraph 6.3.12.

   The output and bypass backfeed relays open, and the power module is turned off.
3. Perform the battery charger off procedure in paragraph 6.3.10.

   The input and battery relays open.

WARNING

Power is present inside the UPS cabinet after the upstream input feeder circuit breakers are opened because of the installed internal batteries.

4. Open the UPS input circuit breaker.
5. If the UPS contains a bypass breaker, open the bypass breaker.
6. Open the UPS input and bypass feeder circuit breakers.
7. If EBCs are installed, open all battery breakers.

6.3.10 Charger Control

To turn the battery charger on:

1. Select the **CONTROLS** symbol on the main menu bar. The System Control screen is displayed.
2. Select Battery on the System Control screen.
3. On the Battery System Control screen, select the **RESTING ➔ CHARGING** command, then press the **RETURN** pushbutton.

To turn the battery charger off:

1. Select the **CONTROLS** symbol on the main menu bar. The System Control screen is displayed.
2. Select Battery on the System Control screen.
3. On the Battery System Control screen, select the **CHARGING ➔ RESTING** command, then press the **RETURN** pushbutton.

6.3.11 Battery Test

NOTE 1 This UPS has a user initiated battery test intended to determine if the batteries are able to support the load.

NOTE 2 The battery test is only able to be initiated when the battery is fully charged. This normally occurs within 72 hours of the start of a charging cycle. The command will not be shown if the test is not able to be run.

To start the battery test:

1. Select the **CONTROLS** symbol on the main menu bar. The System Control screen is displayed.
2. Select Battery on the System Control screen.
3. On the Battery System Control screen, select the **RESTING ➔ TESTING** command, then press the **RETURN** pushbutton.

6.3.12 Using the UPS LOAD OFF Command

A UPS Load Off is initiated by the Load Off command on the UPS Control screen. The UPS **LOAD OFF** controls the UPS output by powering down the UPS and de-energizing the critical load.

The UPS (including Bypass) remains off until restarted.

To use the **LOAD OFF** command:

1. Select the **CONTROLS** symbol on the main menu bar. The System Control screen is displayed.
2. Select UPS on the System Control screen.
3. On the UPS System Control screen, select the **NORMAL ➔ LOAD OFF** or **BYPASS ➔ LOAD OFF** command depending on the UPS mode, then press the **RETURN** pushbutton.

   The Verify Action screen is displayed, providing a choice to proceed or abort the shutdown.

CAUTION

All power to the critical load is lost when the LOAD OFF is selected in the following step. You should use this feature only when you want to de-energize the critical load.

4. Select Yes or no, then press the **RETURN** pushbutton.

   Selecting Yes will immediately shut down the UPS and de-energize the critical load. Selecting No will abort the shutdown.

CAUTION

Do not attempt to restart the system after Load Off until the cause of the shutdown has been identified and cleared.

5. To restart the UPS after pressing the **LOAD OFF** pushbutton, follow the procedure in paragraph 6.3.1 or 6.3.2.

WARNING

Power is present inside the UPS cabinet after the upstream input feeder circuit breakers are opened because of the installed internal batteries.

6.3.13 Using the Remote Emergency Power-off Switch

A UPS emergency power-off is initiated by the REPO pushbutton switch. In an emergency, you can use this switch to control the UPS output. The REPO switch de-energizes the critical load and powers down the UPS immediately, without asking for verification.

The UPS, including Bypass, remains off until restarted.

CAUTION

All power to the critical load is lost when the REPO switch is activated in the following step. You should use this feature only when you want to de-energize the critical load.

NOTE The following instructions are for the Eaton-supplied REPO switch. If a customer-supplied REPO switch is used, it may not activate in the same manner; refer to the operating instructions provided with the switch.

To use the REPO switch:

1. Firmly push the red pushbutton until it locks into place. The switch latches into the activated state (see Figure 6-9).

   The input, output, battery, and bypass backfeed relays open, and the power module is turned off immediately, without asking for verification.

CAUTION

Do not attempt to restart the system after the REPO until the cause of the shutdown has been identified and cleared.

2. To deactivate the REPO switch in preparation for restarting the UPS, insert the supplied key and rotate clockwise until the red pushbutton releases (see Figure 6-9). To remove the key, rotate the key back to the vertical position.
3. Restart the UPS by following the procedure in paragraph 6.3.1 or 6.3.2.

⚠ WARNING

Power is present inside the UPS cabinet after the upstream input feeder circuit breakers are opened because of the installed internal batteries.

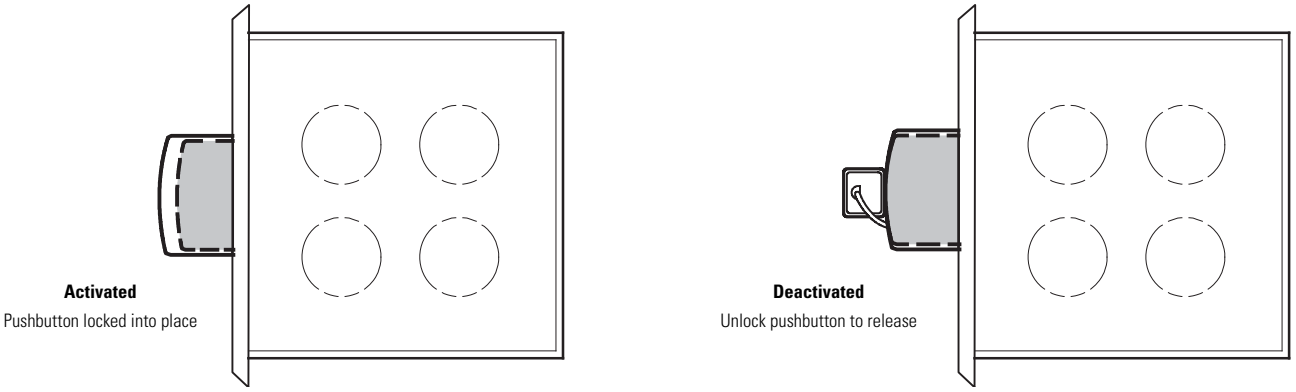

Figure 6-9. REPO Operation

6.4 Multiple UPS Parallel Operation

The paragraphs in this section provide operating instructions for a UPS system containing multiple UPSs.

NOTE 1 If an External Battery Cabinet (EBC) is installed, refer to the *Eaton 9E External Battery Cabinet Installation Manual* listed in paragraph 1.8 for EBC battery breaker location.

NOTE 2 If an Integrated Accessory Cabinet-Tie (IAC-T) is installed, refer to the *Eaton 9E Integrated Accessory Cabinet-Tie and Bypass Installation and Operation Manual* listed in paragraph 1.8 for operating instructions.

NOTE 3 I an Integrated Accessory Cabinet-Tie and Bypass is installed, refer to the *Eaton 9E Integrated Accessory Cabinet-Tie and Bypass Installation and Operation Manual* listed in paragraph 1.8 for operating instructions.

NOTE 4 If an Integrated Accessory Cabinet-Distribution (IAC-D) is installed, refer to the *Eaton 9E Integrated Accessory Cabinet-Distribution Installation and Operation Manual* listed in paragraph 1.8 for operating instructions.

NOTE 5 Start and control system wide functions from UPS 1.

6.4.1 Starting the Parallel UPS in High-Efficiency Normal Mode (Default Mode)

To start the UPS system:

1. Unfasten the front door by lifting the latch from the bottom and turning to the right (counterclockwise) and swing the door open (see Figure 6-1).
2. Verify that all input breakers are open.
3. If the UPSs contain a bypass breaker, verify that all of the bypass breakers are open.
4. Close all Module Output Breakers (MOBs).
5. Close all UPS input feeder circuit breakers.
6. If the UPSs contain a bypass breaker, close all of the UPSs Bypass input feeder circuit breakers.
7. Close all input breakers.
8. If the UPSs contain a bypass breaker, close all bypass breakers.
9. Close the door and secure the latch.

NOTE For each UPS, if two EBCs are installed, EBC 1 must be closed to supply DC input to the UPS. EBC 2 may be left open, but battery runtime will be reduced.

10. If EBCs are installed, close all battery breakers.
11. Observe the UPS control panel displays becoming active, indicating logic power.
12. Verify no alarms are active.
13. Select the **CONTROLS** symbol on the main menu bar. The System Control screen is displayed.
14. If not already selected, select UPS on the System Control screen.
15. On the UPS System Control screen, select the **LOAD OFF ➡ NORMAL** command, then press the **RETURN** pushbutton.

16. If requested, enter the Level 1 password. Default password is 1111.

    All rectifiers and inverters turn on. The inverters continue to ramp up to full voltage.

    Once all inverters reaches full voltage, the UPS output relay closes and the static switches turns off. Power is now supplied to the critical load in HE Normal mode. It takes approximately one minute for the UPS to achieve HE Normal mode.

    The Normal status indicator is illuminated.

6.4.2 Starting the Parallel UPS in Bypass Mode

If the inverter output of the parallel UPS system is not available and the critical load needs to be energized:

⚠ CAUTION

In Bypass mode, the critical load is not protected from commercial power interruptions and abnormalities.

1. Unfasten the front door by lifting the latch from the bottom and turning to the right (counterclockwise) and swing the door open (Figure 6-1).
2. Verify that all input breakers are open.
3. If the UPSs contain a bypass breaker, verify that all of the bypass breakers are open.
4. Close all Module Output Breakers (MOBs)
5. Close all UPS input feeder circuit breakers.
6. If the UPSs contain a bypass breaker, close all of the UPS Bypass input feeder circuit breakers.
7. Close all input breakers.
8. If the UPSs contain a bypass breaker, close all of the bypass breakers.
9. Close the door and secure the latch.

NOTE For each UPS, if two EBCs are installed, EBC 1 must be closed to supply DC input to the UPS. EBC 2 may be left open, but battery runtime will be reduced.

10. If EBCs are installed, close all battery breakers.
11. Observe the UPS control panel displays becoming active, indicating logic power.
12. Verify no alarms are active.
13. Select the **CONTROLS** symbol on the main menu bar. The System Control screen is displayed.
14. If not already selected, select UPS on the System Control screen.
15. On the UPS System Control screen, select the **LOAD OFF ➡ BYPASS** command, then press the **RETURN** pushbutton.

    The critical load is immediately supplied by the bypass source, in Bypass mode from all UPSs.

    The **BYPASS** status indicator is illuminated.

6.4.3 Transfer from Normal to Bypass Mode

To transfer the critical load to Bypass mode:

CAUTION

In Bypass mode, the critical load is not protected from commercial power interruptions and abnormalities.

1. Select the **CONTROLS** symbol on the main menu bar. The System Control screen is displayed.
2. If not already selected, select UPS on the System Control screen.
3. On the UPS System Control screen, select the **NORMAL** ➡ **BYPASS** command, then press the **RETURN** pushbutton.

   All of the UPSs transfer to Bypass mode.

   The **BYPASS** status indicator is illuminated. The power module remains on.

WARNING

Power is present inside the UPS cabinet.

6.4.4 Transfer from Bypass to Normal Mode

To transfer the critical load to Normal mode:

1. Select the **CONTROLS** symbol on the main menu bar. The System Control screen is displayed.
2. If not already selected, select UPS on the System Control screen.
3. On the UPS System Control screen, select the **BYPASS** ➡ **NORMAL** command, then press the **RETURN** pushbutton.

   All of the UPSs transfer to Normal mode. If the power module is not available, the system remains on bypass and an alarm sounds.

   The **NORMAL** status indicator is illuminated.

6.4.5 Transfer from HE Normal Mode to Standard Normal Mode

To transfer the load to Standard Normal mode:

1. Select the **CONTROLS** symbol on the main menu bar. The System Control screen is displayed.
2. If not already selected, select UPS on the System Control screen.
3. On the UPS System Control screen, select the **HE: ENABLE** ➡ **DISABLE** command, then press the **RETURN** pushbutton.

   All of the UPSs transfer to Standard Normal mode.

   The **NORMAL** status indicator is illuminated.

6.4.6 Transfer from Standard Normal Mode to HE Normal mode

To transfer the load to HE Normal mode:

1. Select the **CONTROLS** symbol on the main menu bar. The System Control screen is displayed.
2. If not already selected, select UPS on the System Control screen.
3. On the UPS System Control screen, select the **HE: DISABLE ➡ ENABLE** command, then press the **RETURN** pushbutton.

   All of the UPSs transfer to HE Normal mode if no abnormal power conditions are detected. If abnormal power conditions are detected, the UPSs will wait and transfer to HE mode when conditions are cleared.

   The **NORMAL** status indicator is illuminated.

6.4.7 Transfer from Normal Mode to Maintenance Bypass

To transfer the load to maintenance bypass:

1. Transfer the load to bypass mode by performing the procedure in paragraph 6.4.3.

   All of the UPSs transfer to bypass.
2. Remove cover from maintenance bypass switch (see Figure 6-8).
3. Turn the maintenance bypass switch to the MAINTENANCE position.

   The UPS is now bypassed, with the load powered directly by utility power.
4. Open the UPS input circuit breaker.

⚠ WARNING

Power is present inside the UPS cabinet.

6.4.8 Transfer from Maintenance Bypass to Normal Mode

To transfer the load to Normal mode:

1. Close the UPS input circuit breaker.
2. Restart the UPS in bypass mode by performing the procedure in paragraph 6.4.2.
3. Verify that the UPS is in bypass mode.
4. Turn the maintenance bypass switch to the UPS position.
5. Reinstall the cover over the maintenance bypass switch.
6. Transfer the load to normal by performing the procedure in paragraph or 6.4.4.

6.4.9 Single UPS Shutdown

To shut down a single UPS:

1. Open the MOB for the UPS being shut down.
2. Select the **CONTROLS** symbol on the main menu bar. The System Control screen is displayed.
3. If not already selected, select UPS on the System Control screen.

4. On the UPS System Control screen, select the **NORMAL ➡ UPS OFF** command, then press the **RETURN** pushbutton.

   The output and bypass backfeed relays open, and the power module is turned off on the UPS being shut down.

   Logic power remains on.

⚠ WARNING

Power is present inside the UPS cabinet until the upstream input feeder circuit breaker is opened.

5. Open the UPS input and, if installed, the bypass feeder circuit breakers for the UPS being shut down.
6. If EBCs are installed, open all battery breakers

   The UPS is now completely shut down.

6.4.10 Single UPS Restart

To restart a single UPS from a shutdown state:

1. Close the MOB for the UPS being restarted.
2. Close the UPS input and, if installed, bypass feeder circuit breakers for the UPS being restarted.
3. Close the input breaker.
4. If the UPS contains a bypass breaker, close the bypass breaker.
5. If EBCs are installed, close the battery breakers.
6. On the UPS being restarted, observe the UPS control panel display becoming active, indicating logic power.
7. Verify no alarms are active on the UPS being restarted.
8. On the UPS being restarted, select the **CONTROLS** symbol on the main menu bar. The System Control screen is displayed.
9. If not already selected, select UPS on the System Control screen.
10. On the UPS System Control screen, select the **UPS OFF ➡ NORMAL** command, then press the **RETURN** pushbutton.
11. If requested, enter the Level 1 password. Default password is 1111.

    The rectifier and inverter turn on. The inverter continues to ramp up to full voltage.

    Once the inverter reaches full voltage, the UPS output relay closes and the static switch turns off. Power is now supplied to the critical load in HE Normal mode along with the other UPSs online. It takes approximately one minute for the UPS to achieve HE Normal mode.

    The Normal status indicator is illuminated.

6.4.11 UPS and Critical Load Shutdown

To perform maintenance or service on the critical load, shut down power to the load:

1. Turn off all equipment that is being powered by the UPS parallel system.
2. Transfer the UPSs to bypass by performing the procedure in paragraph 6.4.3.
3. Perform the LOAD OFF procedure in paragraph 6.4.14.

   The output and bypass backfeed relays open, and the power module is turned off.

4. Perform the battery charger off procedure in paragraph 6.4.12 for each UPS.

   The input and battery relays open.

WARNING

Power is present inside the UPS cabinets after the upstream input feeder circuit breakers are opened because of the installed internal batteries.

5. Open all of the UPS input circuit breakers.
6. If the UPSs contain a bypass breaker, open all of the bypass breakers.
7. Open all of the MOBs.
8. Open all of the UPSs input and bypass feeder circuit breakers.
9. If EBCs are installed, open all battery breakers

6.4.12 Charger Control

To turn an individual UPS battery charger on:

1. Select the **CONTROLS** symbol on the main menu bar on the UPS requiring the charger to be turned on. The System Control screen is displayed.
2. Select Battery on the System Control screen.
3. On the Battery System Control screen, select the **RESTING ➔ CHARGING** command, then press the **RETURN** pushbutton.

To turn an individual UPS battery charger off:

1. Select the **CONTROLS** symbol on the main menu bar on the UPS requiring the charger to be turned off. The System Control screen is displayed.
2. Select Battery on the System Control screen.
3. On the Battery System Control screen, select the **CHARGING ➔ RESTING** command, then press the **RETURN** pushbutton.

6.4.13 Battery Test

NOTE 1 This UPS has a user initiated battery test intended to determine if the batteries are able to support the load.

NOTE 2 The battery test is only able to be initiated when the battery is fully charged. This normally occurs within 72 hours of the start of a charging cycle. The command will not be shown if the test is not able to be run.

To start an individual UPS battery test:

1. Select the **CONTROLS** symbol on the main menu bar on the UPS to be tested. The System Control screen is displayed.
2. Select Battery on the System Control screen.
3. On the Battery System Control screen, select the **RESTING ➔ TESTING** command, then press the **RETURN** pushbutton.

6.4.14 Using the UPS LOAD OFF Command

A UPS Load Off is initiated by the Load Off command on the UPS Control screen. The UPS **LOAD OFF** controls the UPSs output by powering down the UPS and de-energizing the critical load.

The UPSs (including Bypass) remains off until restarted.

To use the **LOAD OFF** command:

1. Select the **CONTROLS** symbol on the main menu bar on the UPS to be shut down. The System Control screen is displayed.
2. Select UPS on the System Control screen.
3. On the UPS System Control screen, select the **NORMAL ➡ LOAD OFF** or **BYPASS ➡ LOAD OFF** command depending on the UPS mode, then press the **RETURN** pushbutton.

   The Verify Action screen is displayed, providing a choice to proceed or abort the shutdown.

⚠ CAUTION

All power to the critical load is lost when the LOAD OFF is selected in the following step. You should use this feature only when you want to de-energize the critical load.

4. Select Yes or no, then press the **RETURN** pushbutton.

   Selecting Yes will immediately shut down the UPS and de-energize the critical load. Selecting No will abort the shutdown.
5. If another UPS is to be shut down, proceed to that UPS and repeat Step 1 through Step 4.

⚠ CAUTION

Do not attempt to restart the system after Load Off until the cause of the shutdown has been identified and cleared.

6. To restart the UPS after pressing the **LOAD OFF** pushbutton, follow the procedure in paragraph 6.4.1 or 6.4.2.

⚠ WARNING

Power is present inside the UPS cabinet after the upstream input feeder circuit breakers are opened because of the installed internal batteries.

6.4.15 Using the Remote Emergency Power-off Switch

A UPS emergency power-off is initiated by the REPO pushbutton switch. In an emergency, you can use this switch to control the UPS output. The REPO switch de-energizes the critical load and powers down the UPSs immediately, without asking for verification.

The UPSs, including Bypass, remains off until restarted.

⚠ CAUTION

All power to the critical load is lost when the REPO switch is activated in the following step. You should use this feature only when you want to de-energize the critical load.

NOTE The following instructions are for the Eaton-supplied REPO switch. If a customer-supplied REPO switch is used, it may not activate in the same manner; refer to the operating instructions provided with the switch.

To use the REPO switch:

1. Firmly push the red pushbutton until it locks into place. The switch latches into the activated state (see Figure 6-9).

   The input, output, battery, and bypass backfeed relays open, and the power module is turned off immediately, without asking for verification.

⚠ CAUTION

Do not attempt to restart the system after the REPO until the cause of the shutdown has been identified and cleared.

2. To deactivate the REPO switch in preparation for restarting the UPS, insert the supplied key and rotate clockwise until the red pushbutton releases (see Figure 6-9). To remove the key, rotate the key back to the vertical position.
3. Restart the UPS by following the procedure in paragraph 6.4.1 or 6.4.2.

⚠ WARNING

Power is present inside the UPS cabinet after the upstream input feeder circuit breakers are opened because of the installed internal batteries.

Chapter 7 Communication

This chapter describes the communication features of the Eaton 9E UPS. For terminal wiring information, see paragraph 3.2.3 and paragraph 4.11. For location of the customer interface panel and terminals, see Figure 4-10 and Figure 4-11.

7.1 Mini-Slot Cards

The Eaton 9E UPS has two standard, factory-installed Mini-Slot communication bays. See Figure 4-10 for bay locations. The UPS is compatible with the following Mini-Slot cards (see Figure 7-1):

NOTE Only one Network Management Card or Network Management Card and Modbus/Jbus can be used at one time.

- Network Management Card and Modbus/Jbus – provides remote monitoring through a Web browser interface, e-mail, and a network management system (NMS) using SNMP and connects to a twisted-pair Ethernet (10/100BaseT) network. The card also provides direct integration of UPS information (meters and status) to a Building Management System (BMS) using the Modbus RTU protocol.
- Network Management Card – provides remote monitoring through a Web browser interface, e-mail, and a network management system (NMS) using SNMP and connects to a twisted-pair Ethernet (10/100BaseT) network.
- Relay Card – MS – two types of interfaces via a DB9 connector are available with this card. Dry contact mode provides a simple way to transmit UPS information to an alarm system, PLC, or computer system via dry relay contacts. The transmitted information is load powered, load on bypass, load on battery, load on utility, battery fault, and low battery. RS232 mode provides an RS232 interface for connection to a PC or to a UPS Control display unit. Jumpers are used to select the interface (contacts or RS232).

LAN and telephone drops for use with Mini-Slot connectivity cards must be supplied by facility planners or the customer.

For installation and setup of a Mini-Slot card, contact an Eaton service representative (see paragraph 1.8). Refer to the manual supplied with the Mini-Slot card for user instructions.

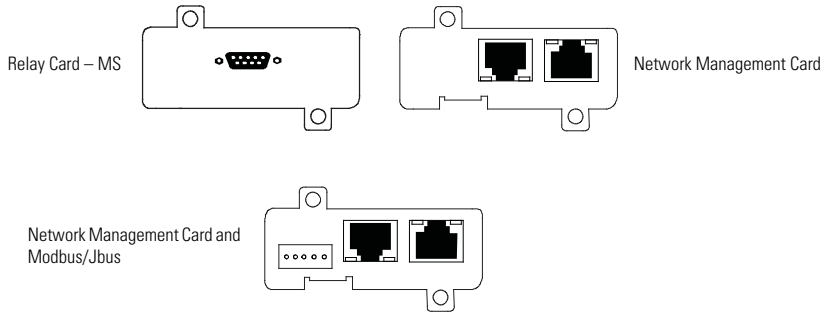

Figure 7-1. Optional Mini-Slot Cards

7.2 Building Alarm Monitoring

This standard feature lets you connect the UPS to your building alarms, such as smoke detectors or overtemperature alarms. The customer interface terminals for external connections are located inside the UPS. Use twisted-pair wires for each alarm input and common.

The building alarms can be programmed to display the alarm functional name.

This page intentionally left blank.

Chapter 8 UPS Maintenance

The components inside the UPS cabinet are secured to a sturdy metal frame. All repairable parts and assemblies are located for easy removal, with very little disassembly. This design allows authorized service personnel to perform routine maintenance and servicing quickly.

You must schedule periodic performance checks of your UPS system to keep it running properly. Regular routine checks of operation and system parameters enable your system to function efficiently for many trouble-free years.

8.1 Important Safety Instructions

Remember that your UPS system is designed to supply power **EVEN WHEN DISCONNECTED FROM THE UTILITY POWER**. The UPS module interiors are unsafe until the DC power source is disconnected and the electrolytic capacitors are discharged. After disconnecting the utility power and the DC power, authorized service personnel should wait at least five minutes for capacitor bleedoff before attempting internal access to the UPS module.

⚠ WARNING

- Servicing and maintenance should be performed by qualified service personnel only.
- LETHAL VOLTAGE PRESENT. This unit should not be operated with the cabinet doors open or protective panels removed. Do not make any assumptions about the electrical state of any cabinet in the UPS system.

Each battery string is an energy source in itself. **DO NOT ATTEMPT TO ACCESS ANY INTERNAL AREA OF THE BATTERY STRING YOURSELF. VOLTAGES ARE ALWAYS PRESENT IN THE BATTERY STRING.** If you suspect that a battery string needs service, contact an Eaton service representative.

If the string requires service contact an Eaton service representative.

Observe these precautions when working on or around batteries:

- Remove watches, rings, or other metal objects.
- Use tools with insulated handles.
- Wear rubber gloves and boots.
- Do not lay tools or metal parts on top of batteries.
- Disconnect the charging source prior to connecting or disconnecting terminals.
- Determine if the battery is inadvertently grounded. If it is, remove the source of the ground. Contact with any part of a grounded battery can result in electrical shock. The likelihood of such shock is reduced if such grounds are removed during installation and maintenance.
- When replacing batteries, use the same number of sealed, lead-acid batteries.
- Proper disposal of batteries is required. Refer to your local codes for disposal requirements.
- Do not dispose of batteries in a fire. Batteries may explode when exposed to flame.
- Do not open or mutilate batteries. Released electrolyte is harmful to the skin and eyes. It may be toxic.

8.2 Performing Preventive Maintenance

The UPS system requires very little preventive maintenance. However, the system should be inspected periodically to verify that the units are operating normally and that the batteries are in good condition.

8.2.1 DAILY Maintenance

Perform the following steps daily:

1. Check the area surrounding the UPS system. Ensure the area is not cluttered, allowing free access to the unit.
2. Ensure the air intakes (vents on the front door of the UPS cabinet and the exhaust openings (on the rear of the UPS cabinet) are not blocked.
3. Ensure the operating environment is within the parameters specified in paragraph 3.2.1 and Chapter 9, "Product Specifications."
4. Ensure the UPS is in Normal mode (Normal status indicator is illuminated). If an alarm lamp is illuminated or the Normal status indicator is not illuminated, contact an Eaton service representative.

8.2.2 MONTHLY Maintenance

Perform the following steps monthly:

1. Monitor system parameters as described in paragraph 6.2, "Using the Control Panel."
2. Check the UPS air filters (located behind the front door) and wash or replace as necessary. See Figure 8-1 for filter location. The filter size is 16.5" x 45.5" × 0.25". Contact an Eaton service representative for replacement filters. To remove the filters:

⚠ CAUTION

Verify washed filter is thoroughly dry before reinstalling.

   a. Unfasten the front door by lifting the latch from the bottom and turning to the right (counterclockwise) and swing the door open (see Figure 6-1).
   b. Remove the foam filter from the frame on the front door.
   c. Replace the washed or new foam filter into the frame on the front door.
   d. Close the front door and secure the latch.
3. Record maintenance results and any corrective actions in a suitable log.

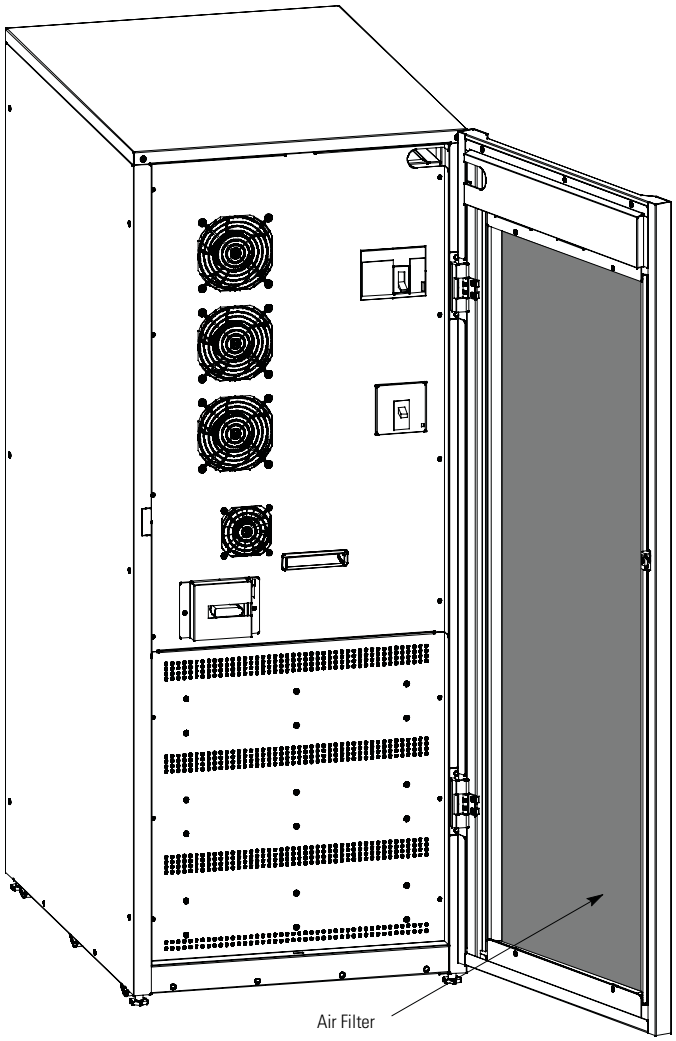

Figure 8-1. Air Filter Location

8.2.3 PERIODIC Maintenance

Periodic inspections of the UPS should be made to determine if components, wiring, and connections exhibit evidence of overheating. Particular attention should be given to the compression lug connections. Maintenance procedures should specify that the compression lug connections be retorqued to values listed in this manual.

8.2.4 ANNUAL Maintenance

Annual preventive maintenance should be performed only by authorized service personnel familiar with maintenance and servicing of the UPS system. Contact an Eaton service representative for more information about service offerings.

8.2.5 BATTERY Maintenance

Contact an Eaton service representative for battery maintenance. Battery replacement and maintenance should be performed only by authorized service personnel.

8.3 Installing Batteries

NOTE There is no manual DC disconnect device within the UPS.

Install batteries in accordance with the battery and battery system manufacturer's instructions.

8.4 Recycling the Used Battery or UPS

Contact your local recycling or hazardous waste center for information on proper disposal of the used battery or UPS.

WARNING

- Do not dispose of the battery or batteries in a fire. Batteries may explode. Proper disposal of batteries is required. Refer to your local codes for disposal requirements.
- Do not open or mutilate the battery or batteries. Released electrolyte is harmful to the skin and eyes. It may be toxic.
- A battery can cause electrical shock, burn from high short-circuit current, or fire. Observe proper precautions.

ATTENTION!

- Une batterie peut prêsenter un risque de choc êlectrique, de brulure, ou d'incendie. Suivre les précautions qui s'imposent.
- Pour le remplacement, utiliser le même nombre et modéle des batteries.
- L'élimination des batteries est règlementée. Consulter les codes locaux à cet effet.

CAUTION

Do not discard the UPS or the UPS batteries in the trash. This product contains sealed, lead-acid batteries and must be disposed of properly. For more information, contact your local recycling/ reuse or hazardous waste center.

CAUTION

Do not discard waste electrical or electronic equipment (WEEE) in the trash. For proper disposal, contact your local recycling/reuse or hazardous waste center.

8.5 Maintenance Training

A basic training course, available from Eaton Corporation, gives you a competent working knowledge of the UPS system operation and teaches you how to perform first level corrective maintenance. For more information about training and other services, contact the Help Desk (see paragraph 1.8).

Chapter 9 Product Specifications

9.1 Model Numbers

The UPS is housed in a free-standing cabinet with safety shields behind the door. The UPS is available in 50 or 60 Hz with various output power ratings.

Models	Power Rating	Frequency
Eaton 9E–20	20 kVA	50/60 Hz
Eaton 9E–30/20	20 kVA	50/60 Hz
Eaton 9E–30/30	30 kVA	50/60 Hz

9.2 Specifications

The following sections detail the input, output, environmental, and battery specifications for the UPS.

9.2.1 UPS Input

Operating Input Voltage	208/220 Vac
Operating Input Frequency Range	50/60 Hz
Operating Input Current	See Table 3-4. **Reduced for Generator** Adjustable
Input Current Harmonic Content	5% THD at full load
Power Factor	Minimum 0.99
Line Surges	4 kV OC, 3 kA SC per ANSI 62.41 and IEC 801 4
Battery Voltage	216 Vdc
Battery Charging Capacity	12A maximum at any load up to100% load

9.2.2 UPS Output

UPS Output Capacity	100% rated current
Output Voltage Regulation	± 1% (10% to 100% load)
Nominal Output Voltage	208 Vac and 220 Vac nominal
Output Voltage Harmonic Content	2% maximum THD (linear load) 5% maximum THD (nonlinear load)
Output Current	See Table 3-4.
Output Voltage Balance	< 2% for 100% maximum load imbalance (linear load)
Output Voltage Phase Displacement	< 2.5° for 100% maximum load imbalance (linear load)
Frequency Regulation	0.1 Hz free running
Synchronous to Bypass	± 4 Hz (default setting)
Frequency Slew Rate	3 Hz per second (default setting)
Load Compatibility	0.8 pF Leading 0.8 pF Lagging
Overload Capability	<110% for 10 minutes <125% for 30 seconds <150% for 150 milliseconds >150% for 40 milliseconds

9.2.3 UPS Environmental

Operating Temperature	0 to 30°C (32 to 86°F) without derating. The recommended operating temperature is 25°C (77°F).
Operating Altitude	Maximum 1500m (5000 ft) at 30°C without derating
Storage Temperature	–25 to +55°C, excluding batteries (prolonged storage above 40°C causes rapid battery self-discharge)
Relative Humidity (operating and storage)	5% to 95% maximum noncondensing
Acoustical Noise	Less than or equal to 57 dB at a 1m distance, per ISO 7779
EMI Emissions and Immunity	Meets IEC 62040-2 C3 and FCC Part 15 Subpart B, ICES-003, CISPR 22, CISPR 24, and VCCI: Class A
Electrostatic Discharge (ESD) Immunity	Meets IEC 61000-4-5 Level 4 specifications. Withstands up to 4 kV pulse without damage and with no disturbance or adverse effect to the critical load.

9.2.4 Battery Runtimes (in Minutes) at Full load

UPS Model	Number of Battery Strings	Runtime
9E–20	4	12
9E–30/20	6	22
9E–30/30	6	12

NOTE Battery times are approximate and vary depending on the load configuration and battery charge.

Warranty

LIMITED FACTORY WARRANTY FOR THREE-PHASE EATON® 9E UPS AND 9E UPS ACCESSORY PRODUCTS

WARRANTOR: The warrantor for the limited warranties set forth herein is Eaton Corporation, an Ohio Corporation ("Eaton").

LIMITED WARRANTY: This limited warranty (this "Warranty") applies only to the original end-user (the "End-User") of the Eaton Three-Phase 9E UPS and 9E UPS Accessory Products (the "Product") and cannot be transferred. This restriction applies even in the event that the Product is initially sold by Eaton for resale to an End-User. This Warranty gives you specific legal rights, and you may also have other rights which vary from State to State (or jurisdiction to jurisdiction).

WHAT THIS LIMITED WARRANTY COVERS: The warrantor warrants, with the terms of this Warranty, that the Eaton three-phase UPS electronics, Eaton-built accessories, and Eaton -built battery cabinets (individually and collectively, the "Warranted Items") are free from defects in material and workmanship.

For Product installed (and currently located) in the fifty (50) United States and the District of Columbia, if, in the opinion of Eaton, a Warranted Item is defective, Eaton's sole obligation, at the option of Eaton, will be to refurbish or replace such defective Warranted Item (including the costs of providing diagnosis, service, and labor ["labor coverage"]). The defective Warranted Item will be refurbished or replaced onsite at the End-User's location or such other location as determined by Eaton. Any parts that are replaced may be new or reconditioned. All parts replaced by Eaton shall become the property of Eaton.

For Product installed (and currently located) outside the fifty (50) United States and the District of Columbia, if, in the opinion of Eaton, a Warranted Item is defective, Eaton's sole obligation, at the option of Eaton, will be to refurbish or replace such defective Warranted Item (not including the costs of labor coverage). The defective Warranted Item will be refurbished or replaced onsite at the End-User's location or such other location as determined by Eaton. Any parts that are replaced may be new or reconditioned. All parts replaced by Eaton shall become the property of Eaton.

LIMITED WARRANTY PERIOD: The period covered by this Warranty for Product installed (and currently located) in the fifty (50) United States and the District of Columbia is six (6) months from the date of Product purchase for labor coverage when no startup is performed by an authorized Eaton Customer Service Engineer or Agent or twelve (12) months from the date of Product purchase with startup performed by an authorized Eaton Customer Service Engineer or Agent and twelve (12) months from the date of Product purchase or eighteen (18) months from date of Product shipment, whichever occurs first, for the refurbishment/ replacement of parts.

The period covered by this Warranty for Product installed (and currently located) outside the fifty (50) United States and the District of Columbia is twelve (12) months from the date of Product purchase or eighteen (18) months from the date of Product shipment, whichever occurs first, for the refurbishment/replacement of parts.

WHAT THIS LIMITED WARRANTY DOES NOT COVER: This Warranty does not cover any defects or damages caused by: (a) failure to properly store the Product before installation, including the "trickle charge" of batteries no later than the date indicated on the packaging; (b) shipping and delivery of the Product if shipping is FOB Factory; (c) neglect, accident, fire, flood, lightning, vandalism, acts of God, Customer's neglect, abuse, misuse, misapplication, incorrect installation; (d) repair or alteration not authorized in writing by Eaton personnel or performed by an authorized Eaton Customer Service Engineer or Agent; or (e) improper testing, operation, maintenance, adjustment, or any modification of any kind not authorized in writing by Eaton personnel or performed by an authorized Eaton Customer Service Engineer or Agent.

This Warranty is not valid: if the Product's serial numbers have been removed or are illegible. Any Warranted Items repaired or replaced pursuant to this Warranty will be warranted for the remaining portion of the original Warranty subject to all the terms thereof. Eaton does not provide a labor warranty for Product located outside of the fifty (50) United States or the District of Columbia. **Any equipment, parts, or materials included in the Product and not manufactured by Eaton are warranted solely by the manufacturer of such equipment, parts, or materials and are not included as part of this Warranty. Batteries are not warranted by Eaton.**

THIS WARRANTY IS THE END-USER'S SOLE REMEDY AND IS EXPRESSLY IN LIEU OF, AND THERE ARE NO OTHER, EXPRESSED OR IMPLIED GUARANTEES OR WARRANTIES (INCLUDING ANY IMPLIED WARRANTY OF MERCHANTABILITY OR FITNESS FOR ANY PURPOSE, WHICH ARE EXPRESSLY DISCLAIMED). SOME STATES OR JURISDICTIONS DO NOT ALLOW THE EXCLUSION OF EXPRESS OR IMPLIED WARRANTIES, SO THE ABOVE EXCLUSION MAY NOT APPLY TO YOU. IN THAT EVENT, SUCH WARRANTIES ARE LIMITED IN DURATION TO THE LIMITED WARRANTY PERIOD. SOME STATES OR JURISDICTIONS DO NOT ALLOW LIMITATIONS ON HOW LONG AN IMPLIED WARRANTY LASTS OR THE EXCLUSION OR LIMITATION OF INCIDENTAL OR CONSEQUENTIAL DAMAGES, SO THE ABOVE LIMITATIONS AND/OR EXCLUSIONS MAY NOT APPLY TO YOU.

LIMITATION OF LIABILITY: In no event shall Eaton be liable for any indirect, incidental, special or consequential damages of any kind or type whatsoever, resulting from or in connection with any claim or cause of action, whether brought in contract or in tort (including negligence and strict liability). Some States or jurisdictions do not allow the exclusion of limitation of incidental or consequential damages, so the above limitation or exclusion may not apply to you. Eaton shall not be responsible for failure to provide service or parts due to causes beyond Eaton's reasonable control. In no case will Eaton's liability under this Warranty exceed the replacement value of the Warranted Items.

END-USER'S OBLIGATIONS: In order to receive the benefits of this Warranty, the End-User must register the product warranty (via mail or online at www.powerquality.eaton.com/Product-Registration "product registration"); use the Product in a normal way; follow the Product's user's guide; and protect against further damage to the Product if there is a covered defect.

OTHER LIMITATIONS: Eaton's obligations under this Warranty are expressly conditioned upon receipt by Eaton of all payments due to it (including interest charges, if any). During such time as Eaton has not received payment of any amount due to it for the Product, in accordance with the contract terms under which the Product is sold, Eaton shall have no obligation under this Warranty. Also during such time, the period of this Warranty shall continue to run and the expiration of this Warranty shall not be extended upon payment of any overdue or unpaid amounts.

COSTS NOT RELATED TO WARRANTY: The End-User shall be invoiced for, and shall pay for, all services not expressly provided for by the terms of this Warranty, including without limitation site calls involving an inspection that determines no corrective maintenance is required. Any costs for replacement equipment, installation, materials, freight charges, travel expenses, or labor of Eaton representatives outside the terms of this Warranty will be borne by the End-User.

OBTAINING WARRANTY SERVICE: In the USA, call the Eaton Customer Reliability Center 7x24 at 800-843-9433. Outside of the USA, call your local Eaton sales or service representative, or call the Eaton Customer Reliability Center in the United States at 919-870-3028. For comments or questions about this Limited Factory Warranty, write to the Customer Quality Representative, 3301 Spring Forest Road, Raleigh, North Carolina 27616 USA.

164202124 5